Hybrid inverter

358-010581-02

Felicitysolar®

Make life full of hope

USER GUIDE

IVGM3KLP1G2-24

IVGM3KLP1G2

IVGM3K6LP1G2

IVGM4K6LP1G2

IVGM5KLP1G2

IVGM6KLP1G2

Contents

1.SAFETY & WARNING 2
2.Product Introduction 2
2.1 Product Features 3
2.2 Basic System Architecture..... 3
2.3 Products Overview.....4
3.Installation.....6
3.1 Packing List..... 6
3.2 Poduct Handling Requirements.....7
3.3 Installation Tools 7
3.4 Installation Environment.....8
3.5 Mounting.....9
4. Electrical connection 11
4.1 Earth Connection 11
4.2 PV Connection 11
4.3 Battery Connection..... 14
4.4 Grid, Load and Gen Port Connection 15
4.5 Function Port Definition.....17
4.6 Smart Meter Connection(Reserve).....18
4.7 Debugging connection.....20
4.8 CT Connection.....20
4.9 DRMS Connection..... 21
4.10 Lithium Battery Communication..... 22
4.11 Installation of WIFI Module 23
4.12 Wire System For Inverter.....24
4.13 Typical Application Diagram of Diesel Generator.....25
4.14 Single Phase(230Vac)parallel Connection Diagram.....26
4.15 Three Phase Parallel Inverter.....27

Hybrid inverter

5. Display and operation 28
5.1 Inverter Power ON/OFF.....28
5.2 Operation and Display Panel.....29
5.3 LCD Display Icons.....30
5.4 Power display.....31
5.5 Basic Setting.....32
5.6 Battery Setting.....33
5.7 Work Mode Setting.....35
5.8 Grid Setting.....38
5.9 Gen Port Setting..... 42
5.10 Profession Setting.....44
5.11 Device Info Setup Menu..... 46
6.System Application.....46
7.Warranty.....50
8.Troubleshooting.....50
9. Download the APP.....51
10. Warning Code.....51
11. Fault Code.....53
Appendix I 57
Appendix II 59
Appendix III..... 60

Purpose of This Manual

This manual provides essential information for the installation, operation, and maintenance of the hybrid solar inverter.
It is intended to help users:
Understand the basic functions and application scenarios of the inverter
Safely complete installation and initial operation
Avoid improper use that may result in equipment damage or safety risks

Important Notice

This manual does not cover all possible photovoltaic (PV) system configurations.
For complex system designs or customized applications, please consult a qualified system integrator.

How to Use This Manual

Before performing any operation on the inverter, read this manual completely and keep it available for future reference.

Due to continuous product development, specifications and functions may change.
The latest version of this manual is available at: **https://www.felicitysolar.com**

Safety Introductions

This chapter contains important safety and operating instructions. Read and keep this manual for future reference.

- Before using the inverter, please read the instructions and warning signs of the battery and corresponding sections in the instruction manual.
- Do not disassemble the inverter. If you need maintenance or repair, take it to a professional service center.
- Improper reassembly may result in electric shock or fire.
- To reduce risk of electric shock, disconnect all wires before attempting any maintenance or cleaning. Turning off the unit will not reduce this risk.
- Caution: Only qualified personnel can install this device with battery.
- Never charge a frozen battery.
- For optimum operation of this inverter, please follow required specifification to select appropriate cable size. It is very important to correctly operate this inverter.
- Be very cautious when working with metal tools on or around batteries. Dropping a tool may cause a spark or short circuit in batteries or other electrical parts, even cause an explosion.
- Please strictly follow installation procedure when you want to disconnect AC or DC terminals. Please refer to "Installation" section of this manual for the details.
- Grounding instructions - this inverter should be connected to a permanent grounded wiring system. Be sure to comply with local requirements and regulation to install this inverter.
- Never cause AC output and DC input short circuited. Do not connect to the mains when DC input short circuits.

1. SAFETY & WARNING

This manual provides relevant information with icons to highlight the physical and property safety of the user to avoid device damage and physical injury.
The Symbols used in this manual are listed as below:

Symbols	Name	Instruction
	Danger	Serious physical injury or even death may occur if not follow the relative requirements
	Warning	Physical injury or damage to the devices may occur if not follow the relative requirements
	Electrostatic sensitive	Damage may occur if not follow the relative requirements
	Hot surface	Sides of the device may become hot. Do not touch.
	Earth terminal	The inverter must be reliably grounded.
5min	Caution	Ensure that DC and AC side circuit breakers have been disconnected and wait at least 5 minutes before wiring and checking.
NOTE	Note	The procedures taken for ensuring proper operation.
CE	CE mark	The inverter complies with the CE directive.
	EU WEEE mark	Product should not be disposed as household waste.

2.Product Introduction

This hybrid solar inverter is designed for **residential and small commercial applications**, providing stable power supply through the integration of:
①PV modules
②Battery storage systems
③Utility grid and optional generator
It supports both **on-grid and off-grid operation**, ensuring power availability during grid outages.

2.1 Product Features

- 3.5-inch LCD touch screen.
- Configurable parameters and working mode by LCD.
- Supporting WIFI monitoring and Fsolar Smart Cloud Monitoring System.
- 2-channel PV, 2-channel MPPT, 1.6 times over configuration capacity.
- Battery charge and discharge current up to 135A.
- Programmable generator port, support smart load and micro inverter access.
- The off-grid switching time is less than 10ms to prevent important loads from losing power.
- Supports single-phase and three-phase parallel operation.
- Support multi Working mode,Time Of Use, Selling First, Zero Ex To GridPort, Zero Export To CT.
  1.With limit Function,prevent excess power overflow to the grid.
  2.Programmable supply priority for battery or grid.
- IP65 protection level.

2.2 Basic System Architecture

The following illustration shows basic application of this inverter.
It also includes following devices to have a complete running system.
- Generator or Utility
- PV modules
Consult with your system integrator for other possible system architectures depending on your requirements.
This inverter can power all kinds of appliances in home or office environment, including motor type appliances such as refrigerator and air conditioner.

Please refer to the Figure2.2-1 for details.

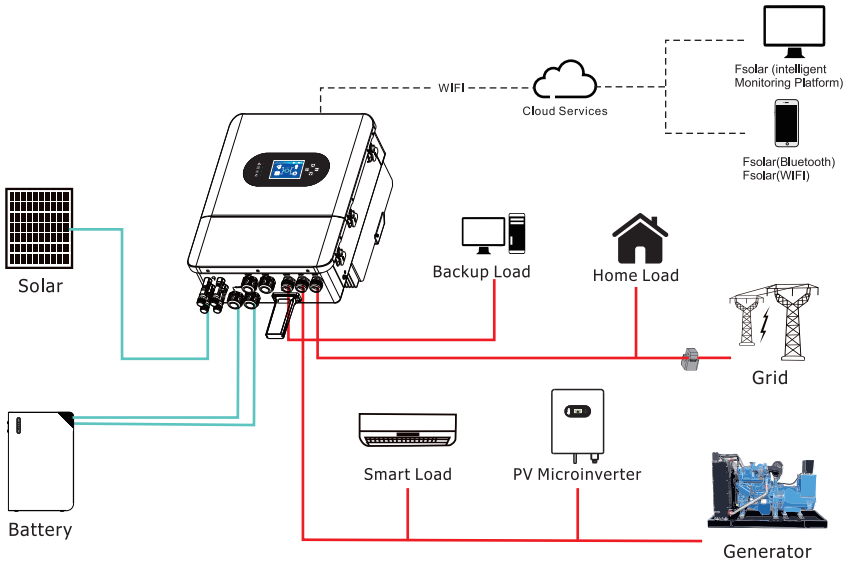

Figure 2.2-1 Block diagram of hybrid solar inverter system

2.3 Products Overview

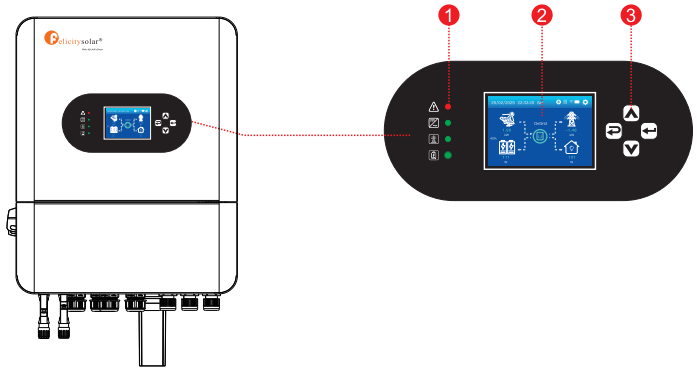

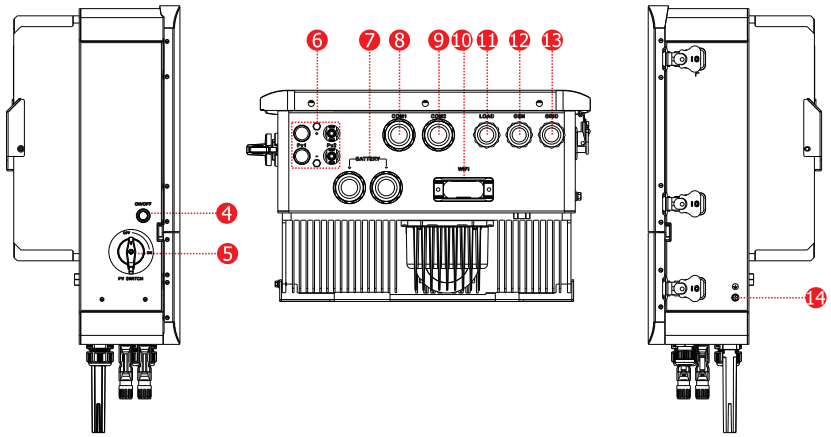

Figure 2.3-1 Products overview

1.Inverter Indicators	6. PV Input Interface	11.LOAD Interface
2. LCD Display	7.Battery Input Interface	12.Gen Interface
3. Function Buttons	8.COMM Interface	13.Grid Interface
4. Power on/off	9.COMM Interface	14.Grounding Point
5.PV Switch	10.WIFI Interface	

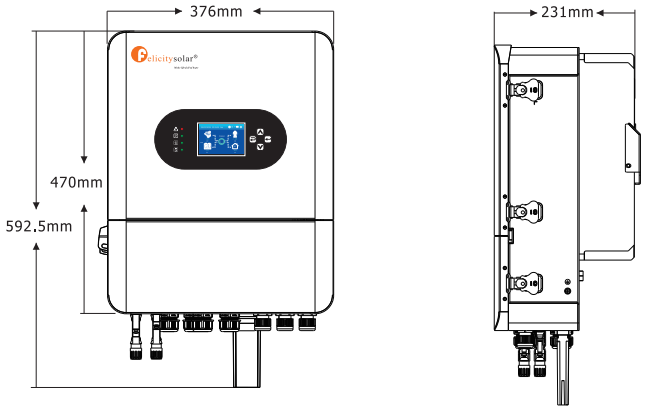

Figure 2.3-2 Inverter dimensions

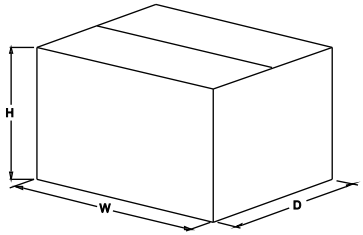

Figure 2.3-3 Paper packages dimension

Table 2.3-1 Packages dimension and gross weight

Model	H (mm)	W (mm)	D (mm)	Net Weight (KG)	Gross Weight (KG)
IVGM3KLP1G2-24 IVGM3KLP1G2 IVGM3K6LP1G2 IVGM4K6LP1G2 IVGM5KLP1G2 IVGM6KLP1G2	348	593	454	19.8	24.5

3. Installation

3.1 Packing List

The inverter 100% strictly inspected before package and delivery. Please check the product package and fittings carefully before installation.

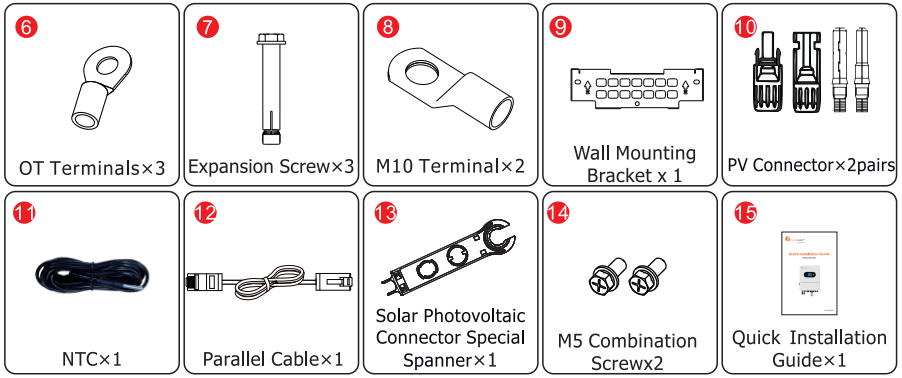

Figure 3.1-1 Packing List

Table 3.1-1 Detailed delivery list

No.	Name	Description	Quantity
1	Inverter	Inverter	1
2	User Manual	User Manual	1
3	Warranty Card	Warranty Card	1
4	CT +Meter(optional)	Meter and anti backflow	/
5	WiFi Module	For installing the WFI module	1
6	OT Terminals	For external ground connection	3
7	Expansion Screw	Used for securing the product's wall mount	3
8	M10 Terminal	For crimping BAT cables	2
9	Wall Mounting Bracket	Used to fix the inverter to the wall	1
10	PV Connector	PV Port Connectors	2 pairs
11	NTC	Battery temperature sensor	1
12	Parallel Cable	Used for parallel wiring	1
13	Solar Photovoltaic Connector Special Spanner	Photovoltaic connector installation spanner	1
14	M5 Combination Screw	Used for fixing wall brackets	2
15	Quick Installation Guide	Quick Installation Guide	1

3.2 Poduct Handling Requirements

Lift the inverter out of the paper package and transport it to the designated installation.

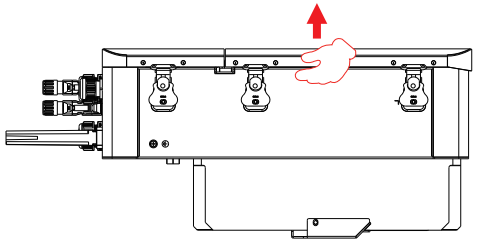

Figure 3.2-1 Lift the inverter

CAUTION:
Improper handling may cause personal injury!

- Arrange an appropriate number of personnel to carry the inverter according to its weight, and installation personnel should wear protective equipment such as anti-impact shoes and gloves.
- Placing the inverter directly on a hard ground may cause damage to its metal enclosure. Protective materials such as sponge pad or foam cushion should be placed underneath the inverter.
- Move the inverter with the strength of 1–2 people or by using appropriate tools. When moving it, grip the handle positions on the heat sink with both hands—do not hold the terminal blocks to move the unit.

3.3 Installation Tools

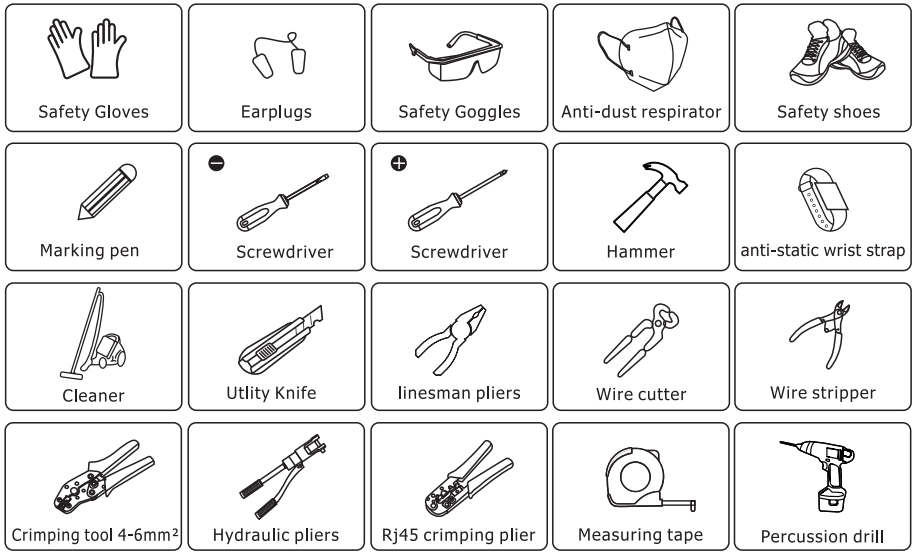

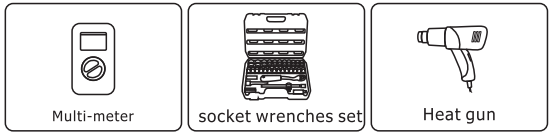

Figure 3.3-1 Installation tools

3.4 Installation Environment

◇Choose a dry, clean, and tidy place, convenient for installation
◇Ambient temperature range: -25℃ ~ 60℃
◇Relative humidity: 0 ~ 95% (non-condensed)
◇Install in a well-ventilated place
◇No flammable or explosive materials close to inverter
◇The AC overvoltage category of inverter is category III
◇Maximum altitude: 2000m

•Inverter cannot be installed near flammable, explosive or strong electro-magnetic equipment.

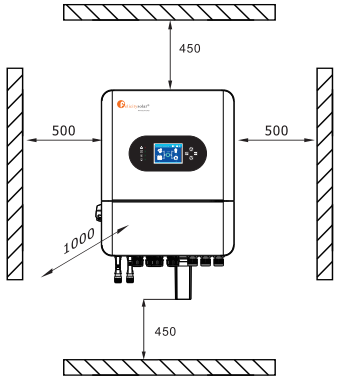

Figure 3.4-1 Installation space of one inverter

Considering the following points before selecting where to install:

- Please select a vertical wall with load-bearing capacity for installation, suitable for installation on concrete or other non-flammable surfaces, installation is shown below.
- Install this inverter at eye level in order to allow the LCD display to be read at all times.
- The ambient temperature should be between -25~60℃ to ensure optimal operation.
- Be sure to keep other objects and surfaces as shown in the diagram to guarantee sufficient heat dissipation and have enough space for removing wires.

Table 3-4-1 Detailed installation space

	Minimum clearance
Lateral	500mm
Top	450mm
Bottom	450mm

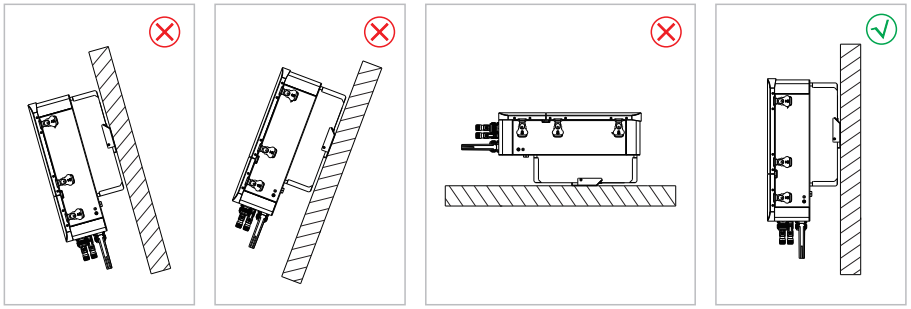

Figure 3.4-2 Installation position

•Do not open the cover of the inverter or replace any part as incomplete inverter may cause electric shock and damage the device during operation.

The installation of inverter should be protected under shelter from direct sunlight or bad weather like snow,rain, lightning etc.

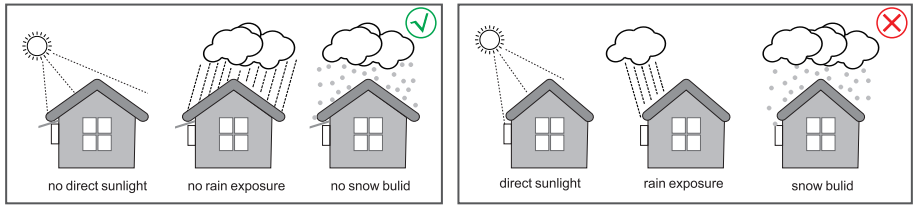

Figure 3.4-3 Installation position

3.5 Mounting

· The inverter is too heavy, please be careful when lifting out from the package.
· Hold the handle to lift out the inverter.

The inverter is suitable for mounting on concrete or other non-combustible surface only.

Step 1. Use the wall mount for calibration. Drill 3 holes(Diameter :8mm; Depth :55~60mm) at the correct positions. Insert the expansion bolts into the holes using a suitable hammer, then install the wall mount and tighten the mounting nuts securely.

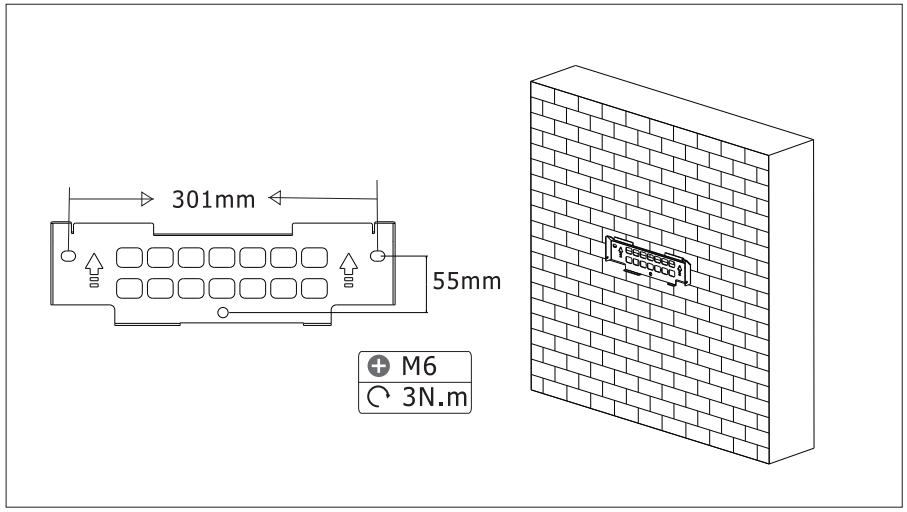

Figure 3.5-1 Mark hole position

Step2. Then lift the inverter, fit the limiting structure of the wall mount into the card slot on the heat sink, and tighten the M5 screws on both sides to complete the wall mounting.

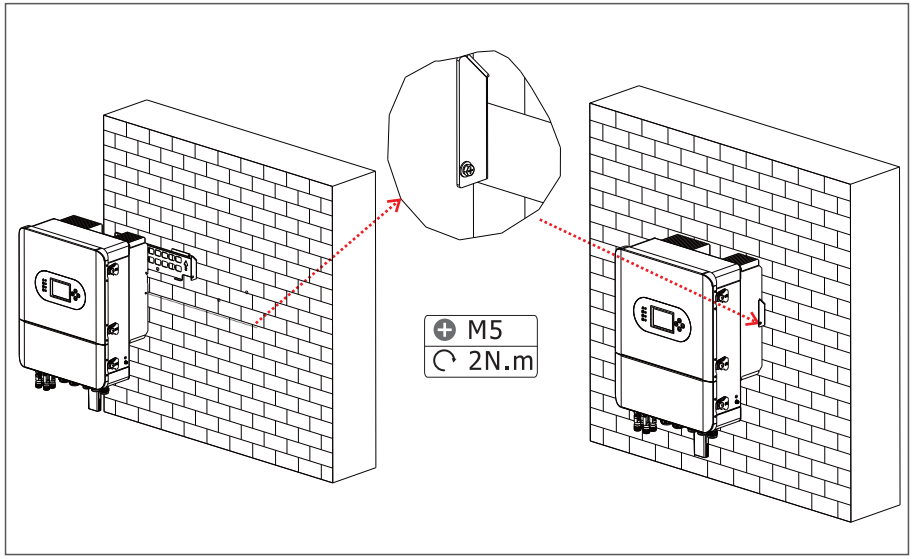

Figure 3.5-2 Install Inverter hanging plate

NOTE •Be careful when mounting because the inverter is very heavy.

4 Electrical Connection

◇High voltages in power conversion circuits. Lethal hazard of electric shock or serious burns.

◇All work on the PV modules, inverters, and battery systems must be carried out by qualified personnel only.

◇Wear rubber gloves and protective clothing (protective glasses and boots) when working on high voltage/high current systems such as INVERTER and battery systems.

4.1 Earth Connection

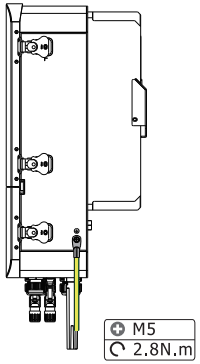

Figure 4.1-1 Earth Connection

Inverter Model	Wire Size	Cable(mm²)
IVGM3KLP1G2-24 IVGM3KLP1G2	10AWG	4
IVGM3K6LP1G2 IVGM4K6LP1G2 IVGM5KLP1G2 IVGM6KLP1G2	8AWG	6

The conductor should be made of the same metal as the phase conductors.

Warning:
Inverter has built-in leakage current detection circuit. The type A RCD can be connected to the inverter for protection according to the local laws and regulations. If an external leakage current protection device is connected, its operating current must be equal to 10mA/KVA or higher, for this series of inverter it should be 300mA or higher, otherwise inverter may not work properly

4.2 PV Connection

1. Switch the Grid Supply Main Switch(AC)OFF.
2. Switch the DC Isolator OFF.
3. Assemble PV input connector to the inverter.

- Before connection, please make sure the polarity of PV array matches the "PV+" and "PV-" symbols
- Before connecting to inverter, please make sure the open circuit voltage of PV strings haven't exceeded the max.PV input voltage of the inverter.
- Please use approved DC cable for PV system.

To reduce the risk of injury, please use the proper recommended cable size as below.

Table 4.2-1 Detailed wire size

Inverter Model	Wire Size	Cable(mm²)
IVGM3KLP1G2-24 IVGM3KLP1G2 IVGM3K6LP1G2 IVGM4K6LP1G2 IVGM5KLP1G2 IVGM6KLP1G2	12AWG	4

Please refer to Appendix I for the specifications of the PV panels

The steps to assemble the PV connectors are listed as follows:

Setp 1. Strip the insulation of the PV wire by 7mm,disassemble the cap nut of the connetctor, thread one PV wire through the cap nut of the connector. Repeat this operation with all the PV wires, paying special attention to the polarity of the connector,as shown in Figure 4.2-1.

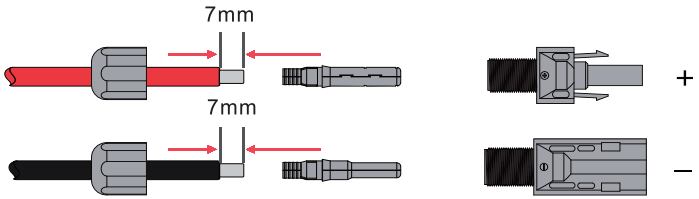

Figure 4.2-1 Pv cables and pv plugs

Note:PV terminals with different polarities have distinct appearancesand must not be connected incorrectly

Setp 2. Crimping metal terminals with crimping pliers,as shown in Figure 4.2-2.

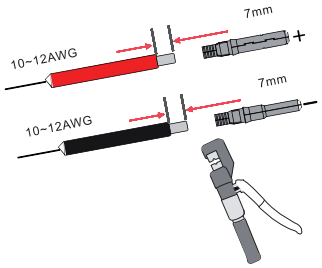

Figure 4.2-2 Crimp the terminal to the wire

Setp3. Insert the contact pin to the top part of the connector and completely tighten the cap nut to the top part of the connector,as shown in Figure 4.2-3.

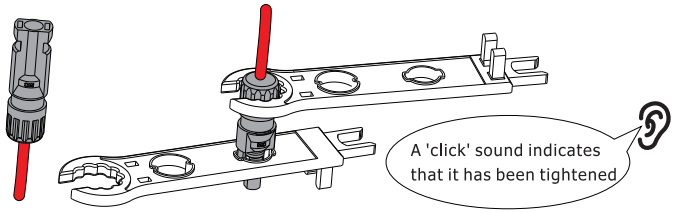

Figure 4.1-3 Connector with cap nut screwed on

Step4. Screw the cap on and plug it onto inverter side. There will be a click sound if connectors are inserted correctly into PV plugs,as shown in Figure 4.2-4.

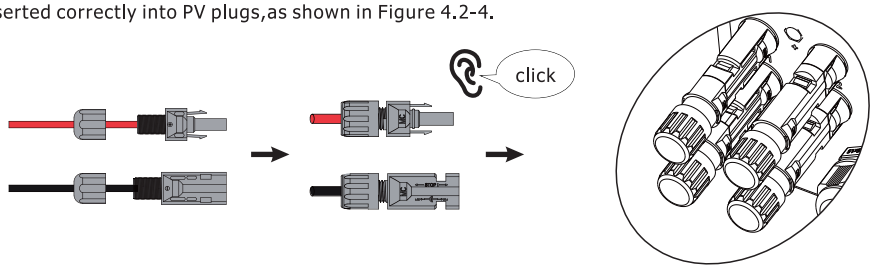

Figure 4.2-4 The PV plug is connected to the inverter

Caution:
Sunlight hits the panels to create voltage, and high voltages in series can be life-threatening. Therefore, before connecting the DC input line, it is necessary to shield the solar panel with opaque material and put the PV switch in the "OFF" state, otherwise, the high voltage of the inverter may lead to a life-threatening situation.

Warning:
Please do not turn off the PV isolator in the presence of high voltage or current. Please use its own PV power connector from the inverter accessories.Do not connect connectors from different manufacturers,the maximum PV input current to a single terminal should be 20A, if exceeds, it may damage the inverter and it is not covered by felicitysolar warranty.

4.3 Battery Connection

Please be careful about any electric shock or chemical hazard.Make sure there is an external DC breaker connected between the inverter and the battery.

•The polarity of battery cannot be connected reversely, otherwise the inverter could be damaged.

Inverter Model	DC Breaker specification	Wire Size	Cable(mm^2)
IVGM3KLP1G2-24	150A	0AWG	50
IVGM3KLP1G2 IVGM3K6LP1G2	100A	2AWG	25
IVGM4K6LP1G2 IVGM5KLP1G2 IVGM6KLP1G2	150A	0AWG	50

Step 1. Prepare a suitable battery cable and accessories, and route the battery power cable through the battery cover. Use accessories box accessories, the battery power cable needs to be based on the inverter model.

Step 2. Make battery terminals, Strip cable coat, revealing 15mm length of metal core.Use special crimper to compress battery terminal tightly.

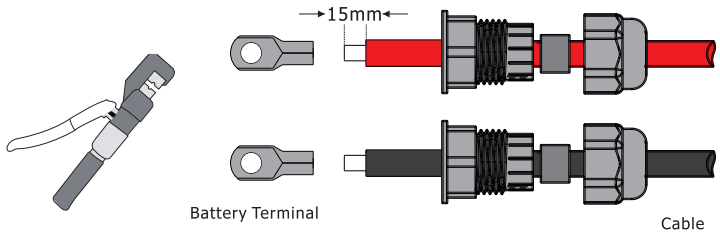

Figure 4.3-1 The battery terminal

Step 3. Connect the battery terminal to the inverter. Ensure that the battery polarity is connected correctly.

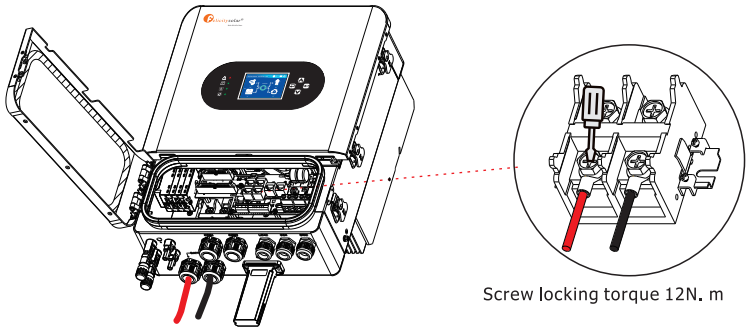

Figure 4.3-2 The battery terminal is connected to the inverter

Warning! All wiring must be performed by a professional person.
- The polarity of Battrey cannot be connected reversely, otherwise the inverter could be damaged.

4.4 Grid, Load and Gen Port Connection

Before connecting to the grid, a separate AC breaker must be installed between the inverter and the grid, and also between the backup load and the inverter. This will ensure the inverter can be securely disconnected during maintenance and fully protected from over current. Check the recommended values in the following tables according to local regulations in each country. The recommended specifications for AC breakers here are based on the Max.Continuous AC passthrough current of inverter, you can also choose the AC breaker of backup side according to the actual total operating current of all the backup loads.

- All wiring must be performed by a qualified personnel.It is very important for system safety and efficient operation to use appropriate cable for AC input connection. To reduce risk of injury, please use the proper recommended cable as below.

AC Breaker for backup load

Table 4.4-1 Recommended AC breaker for backup load

Inverter Model	Recommended AC breaker
IVGM3KLP1G2-24 IVGM3KLP1G2 IVGM3K6LP1G2 IVGM4K6LP1G2 IVGM5KLP1G2 IVGM6KLP1G2	40A

AC Breaker for grid

Table 4.4-2 Recommended AC breaker for grid

Inverter Model	Recommended AC breaker
IVGM3KLP1G2-24 IVGM3KLP1G2 IVGM3K6LP1G2 IVGM4K6LP1G2 IVGM5KLP1G2 IVGM6KLP1G2	40A

There are three terminal blocks with "Grid" "Load" and "GEN" markings. Please do not misconnect input and output connectors.

Grid	This works like a conventional arid-tied inverter. It is both an input and outputconnection for non-essential load and supply.
Load	Connection of essential loads such as lighting, security systems, and Internet
Gen	Generator connection

NOTE: In final installation, breaker certified according to IEC 60947-1 and IEC 60947-2 shall be installed with the equipment.
All wiring must be performed by a qualified personnel. It is very important for System safety and efficient operation to use appropriate cable for AC input connection. To reduce risk of injury, please use the proper recommended cable as below. Following table recommends cable specifificationsbased on bypass current (Max,Continuous AC passthrough),

Grid connection and backup load connection (Copper wires) (bypass)

Table 4.4-3 Grid connection and backup load connection

Inverter Model	Wire Size	Cable(mm²)
IVGM3KLP1G2-24 IVGM3KLP1G2	10AWG	4
IVGM3K6LP1G2 IVGM4K6LP1G2 IVGM5KLP1G2 IVGM6KLP1G2	8AWG	6

- Be sure that AC power source is disconnected before attempting to wire it to the unit.

Please follow below steps to implement Grid, load and Gen port connection:

1. Before making Grid, load and Gen port connection, be sure to turn off AC breaker or disconnect first.
2. Peel off the insulation layer of the AC wire by about 10mm and insert the AC lead into the circular hole, Tighten it with a cross-head screwdriver and check if the cable is loose or stuck, Please ensure that the corresponding N wire and PE wire are also connected to the relevant terminals.
3. Make sure all the wires are securely and completely connected.
4. Some appliances, such as air conditioners and refrigerators, may need a time delay before reconnecting them after a power outage.This delay allows the refrigerant gas to stabilize and prevents potential damage. Check if your appliance has a built-in time-delay function before connecting it to our inverter, Examples of appliances that may require a delay include:

- Air conditioners: Balancing refrigerant gas.
- Refrigerators: Stabilizing the compressor.
- Freezers: Allowing the cooling system to balance.
- Heat pumps: Protecting against power fluctuations.

This inverter will protect your appliances by triggering an overload fault if no time delay is present. However, internal damage may still occur. Refer to the manufacturer's documentation for specific time-delay requirements.

Please refer to section 4.13 for detailed connection diagram.

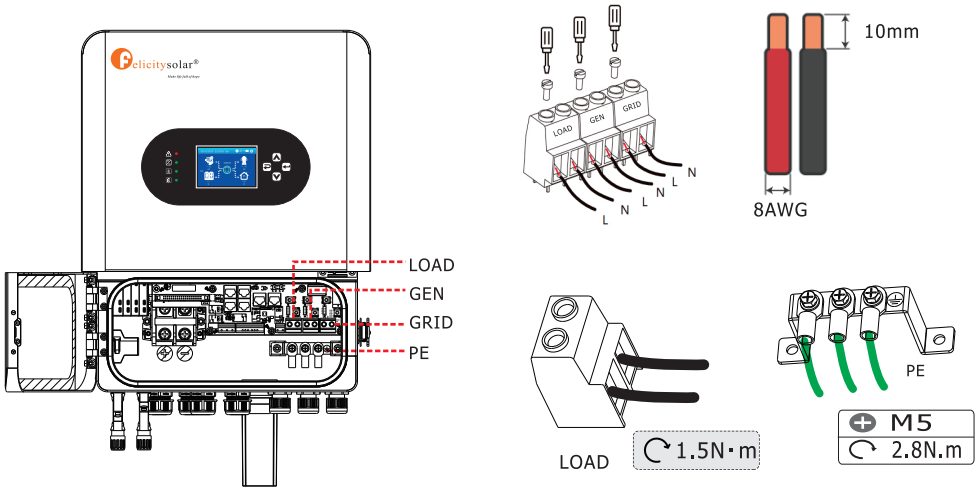

Figure 4.4-1 Gen, Grid, Load and PE port

• All wiring must be carried out by professionals!

4.5 Function Port Definition

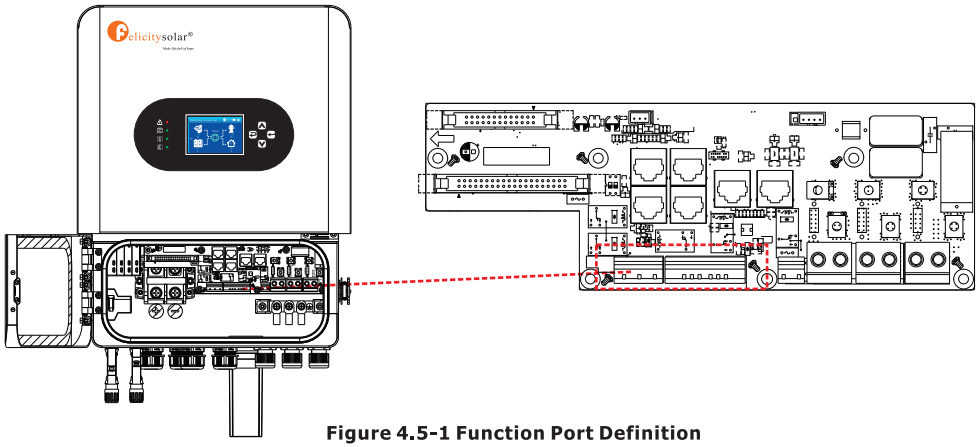

Figure 4.5-1 Function Port Definition

Position	Function
BMS	BMS: RS 485 or CAN port for battery communication.
PARA_A	Parallel communication port 1(CAN interface).
PARA_B	Parallel communication port 2(CAN interface).
DRMS	Remote shutdown function
Meter	For meter communication（RS485 interface）.
Modbus	For debugging purposes only(RS485 interface).
SW1 In parallel	Turn the DIP switch of the first and last inverter to: ON, and the other machines to OFF

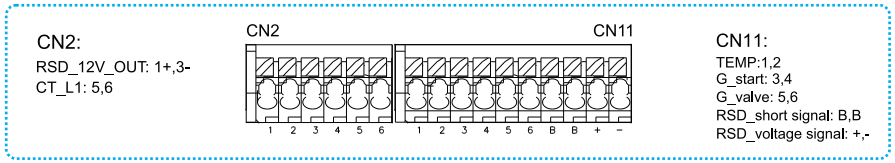

RSD 12V out (CN2:1,3): When battery is connected and the inverter is in "ON" status, it will provide 12vdc,Imax 400ma.
CT_L1 (CN2:5,6): current transformer (CT1) for "zero export to CT" mode clamps on L1 when in split phase system.
TEMP(CN11:1,2):temperature sensor for lead acid battery.
G-start (CN11:3, 4): dry contact signal for startup the diesel generator. When the "GEN signal" is active, the open contact (GS) will switch on(no voltage output).
G-valve(CN11:5,6):reserved.
RSD_Short Signal(CN11:B,B)/RSD Voltage Signal(CN11:+, -): when the terminal "B"&"B" is short-circuited with additional wire connection, or there's 12Vdc input at the terminal "+ &- ", then the 12Vdc of RSD+ & RSD- will disappear immediately, and the inverter will shutdown immediately.
ATS_240V：If the conditions are met, it will output 230Vac,Imax 800mA.

4.6 Smart Meter Connection(Reserve)

Table:4.6-1:Meter & RS485 interface

Position	Function
1	METER_485_B
2	METER_485_A
3	GND-COM
4	METER_485_B
5	METER_485_A
6	GND-COM
7	METER_485_A
8	METER_485_B

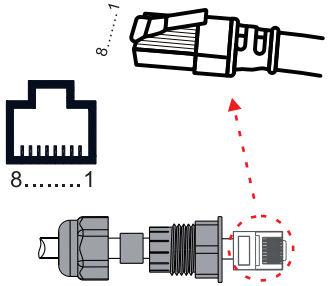

The Smart Meter is optional for IVGM system installation, used to detect grid voltage and current direction and magnitude, further to instruct the operation condition of IVGM inverter via RS485 communication.

(Grid Type: Single Phase)

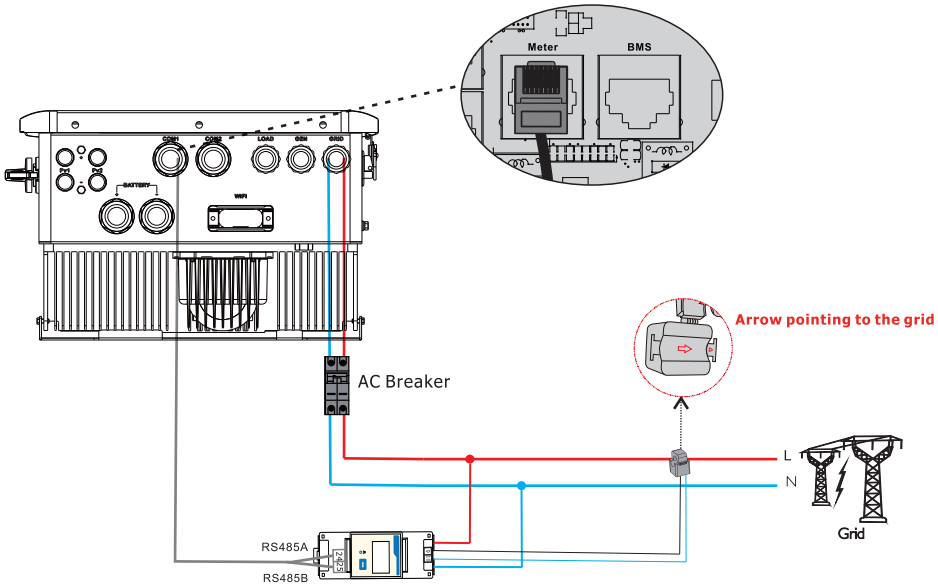

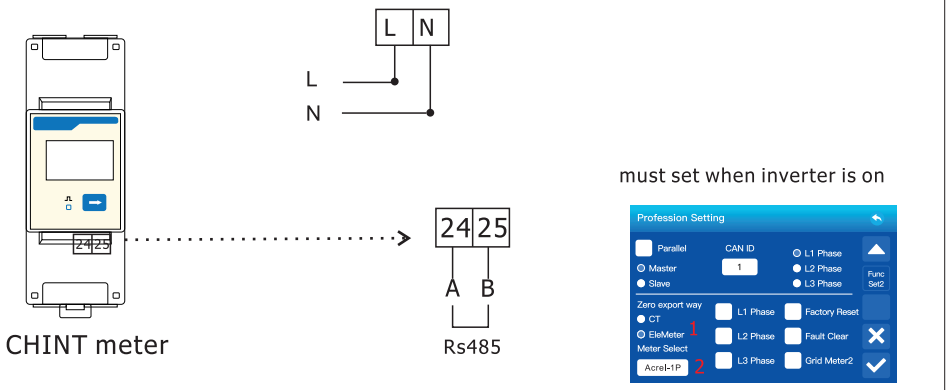

Figure 4.6-1 Smart meter connection(Single phase)

4.7 Debugging connection

Table: 4.7-1: Debugging & RS485 Interface

Position	Function
1	PC_485_B
2	PC_485_A
3	GND_COM
4	/
5	/
6	GND_COM
7	PC_485_A
8	PC_485_B

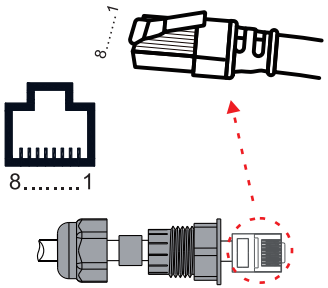

The Modbus port on the IVGM device is intended solely for debugging purposes.

4.8 CT Connection

(Grid Type: Single Phase)

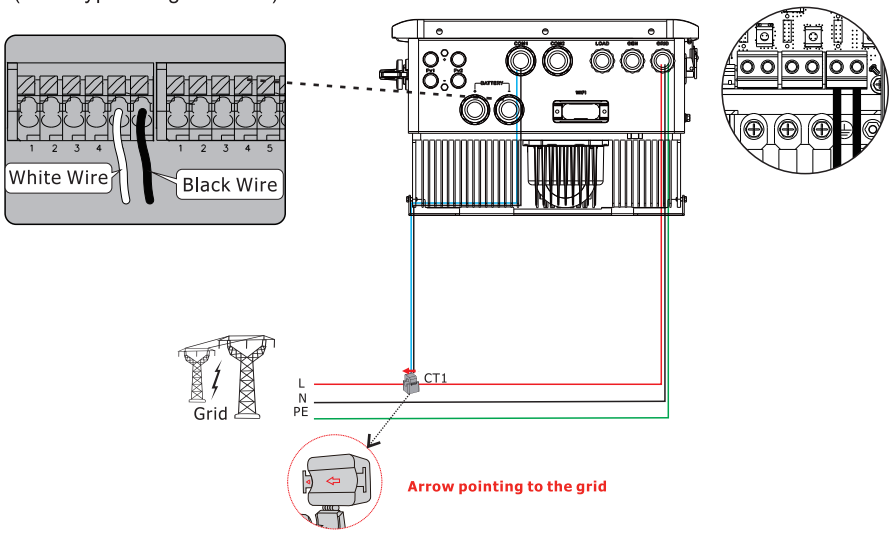

Figure 4.8-1 CT connection

Please refer to Appendix II for detailed CT specifications.

Ct1(+/-): current transformer (CT1) for"zero export to CT"mode clamps on L when in single phase system.

4.9 DRMS Connection

DRMS(Demand Response Modes) is used for Australia and New Zealand and installation (also used as remote shutdown function in European countries), in compliance with Australia and New Zealand safety requirements(or European countries). Inverter integrates control logic and provides an interface for DRMS. The DRMS is not provided by inverter manufacturer. Detailed connection of DRMS & Remote Shutdown are shown below:

Step 1. Open the latch from the right side of the machine. See Figure 4.9-1.

Step 2. Plug out the RJ45 terminal and dismantle the resistor on it. Plug the resistor out, leave the RJ45 terminal for next step.

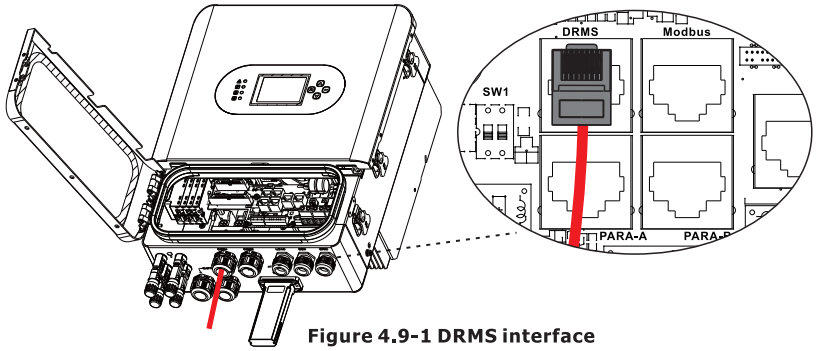

Figure 4.9-1 DRMS interface

NOTE	•The RJ45 terminal in the inverter has the same function as DRED. Please leave it in the inverter if no external device is connected.

Step 3-1 Pass the RJ45 cable through the steel plate and connect the DRED cable to the R]45 terminal. As shown in Figure 4.9-2, Table 4.9-3 describes the 6-pin port definition.

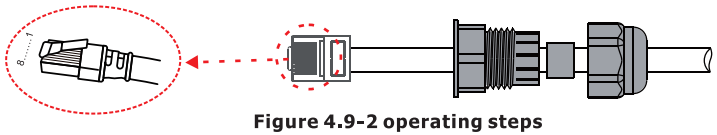

Figure 4.9-2 operating steps

Table 4.9-1 :Port pin allocation table

NO.	1	2	3	4	5	6	7	8
Function	DRM1/5	DRM2/6	DRM3/7	DRM4/8	REF	COM	/	/

Step 3-2 For Remote Shutdown. Run the cable through the steel plate , Then wire from pins 5 and 6. Table 4.9-1 describes the 6-pin port definition,Wiring is shown in Fiqure 4.9-3

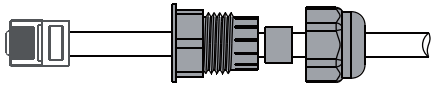

Figure 4.9-3 Remotely close the cable connection

Step 4. Connect RJ45 terminal to the right position onto the inverter.See Figure 4.9-4

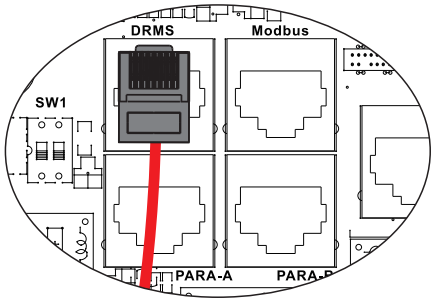

Figure 4.9-4 RJ45 interface

4.10 Lithium Battery Communication

It's allowed to connect lithium battery and build communication only which it has been configured, Please follow bellow steps to configure communication between lithium battery and inverter.

1. Connect power cables between lithium battery and inverter, Please pay attention to the terminals of positive and negative. Make sure the positive terminal of battery is connected to the positive terminal of inverter, and the negative terminal of battery is connected to the negative terminal of inverter.
2. The communication cable is bundled with lithium battery, Both sides are RJ45 port. One port is connected to the BMS port of inverter and another one is connected to the PCSport of lithium battery.

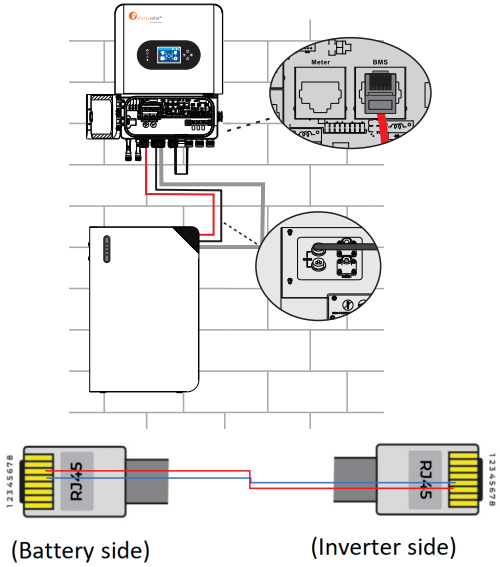

communicate cable with Felicity Low Voltage battery you can find it on battery packing list

Table 4.10-1 :Detailed Pin Function Of BMS Port On IVGM

Position	Function	
1	/	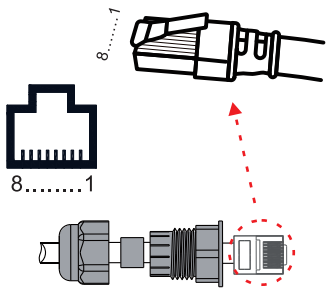
2	/	
3	CAN-L	
4	CAN-H	
5	BMS/485B	
6	BMS/485A	
7	/	
8	/	

4.11 Installation of WIFI module

The WiFi communication function applies only to the WiFi module. For details, see Figure 4.11-1 installing a WiFi module.

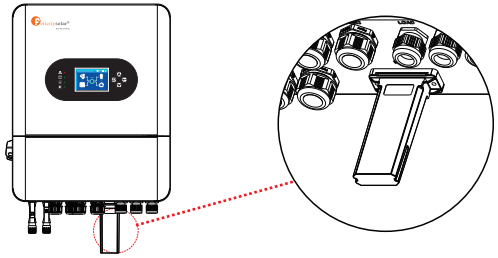

Figure 4.11-1 WiFi Module installation

Table 4.11-1 : WiFi Module installation Table

NO.	1	2	3	4
Function	VCC	GND	WIFI/232RX	WIFI/232TX

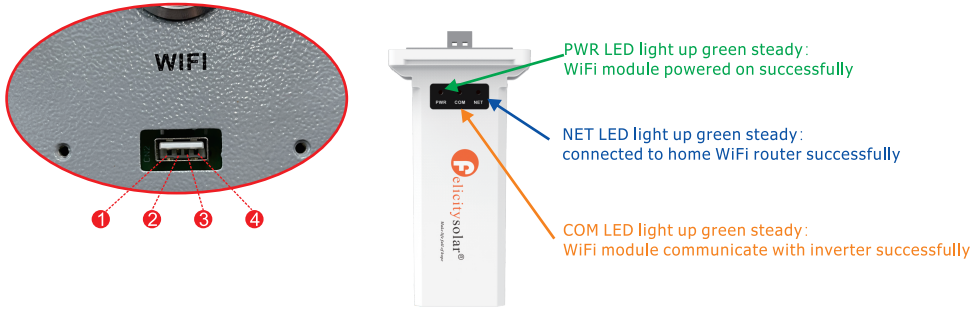

4.12 Wire System For Inverter

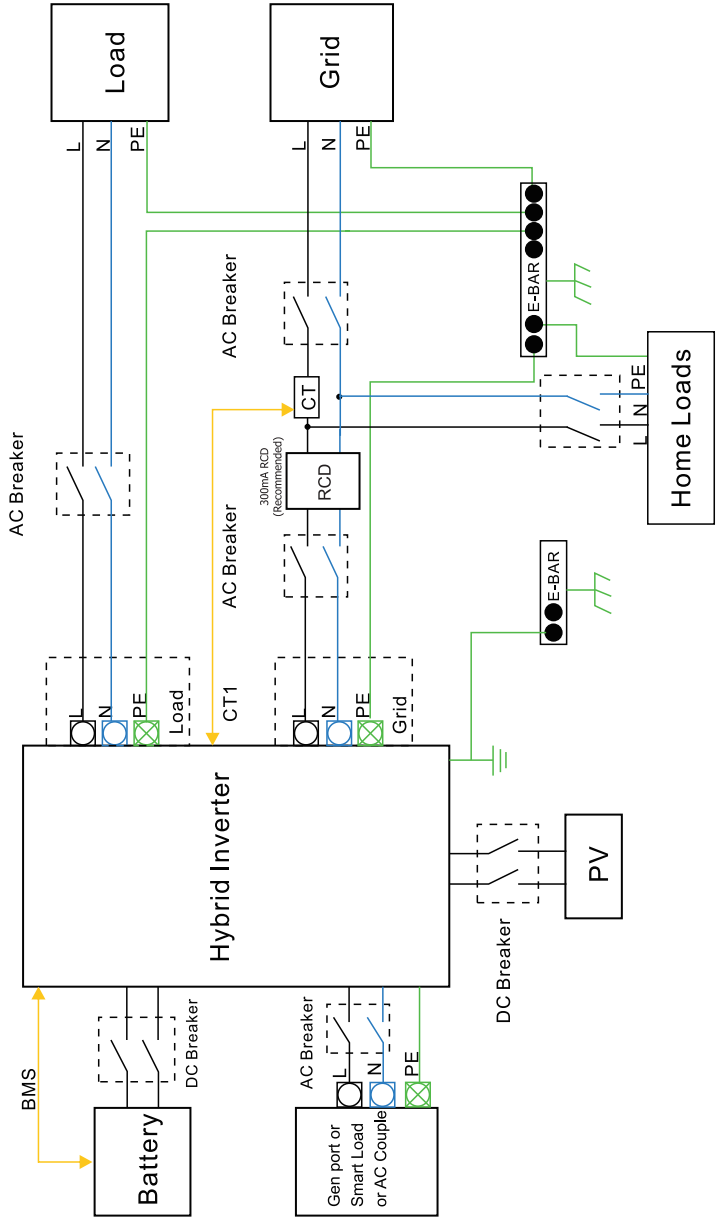

4.13 Typical Application Diagram of Diesel Generator

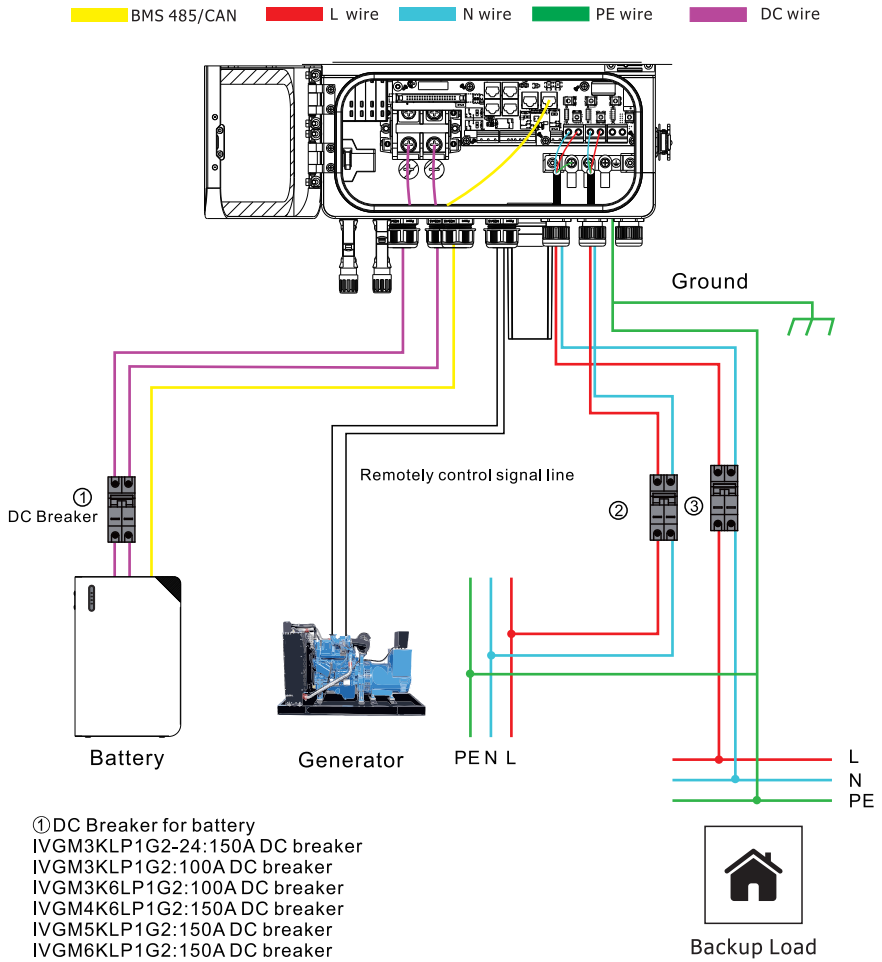

①DC Breaker for battery
IVGM3KLP1G2-24:150A DC breaker
IVGM3KLP1G2:100A DC breaker
IVGM3K6LP1G2:100A DC breaker
IVGM4K6LP1G2:150A DC breaker
IVGM5KLP1G2:150A DC breaker
IVGM6KLP1G2:150A DC breaker

②AC Breaker for grid port
IVGM3KLP1G2-24: 40A AC breaker
IVGM3KLP1G2: 40A AC breaker
IVGM3K6LP1G2: 40A AC breaker
IVGM4K6LP1G2: 40A AC breaker
IVGM5KLP1G2: 40A AC breaker
IVGM6KLP1G2: 40A AC breaker

③AC Breaker for backup load
IVGM3KLP1G2-24: 40A AC breaker
IVGM3KLP1G2: 40A AC breaker
IVGM3K6LP1G2: 40A AC breaker
IVGM4K6LP1G2: 40A AC breaker
IVGM5KLP1G2: 40A AC breaker
IVGM6KLP1G2: 40A AC breaker

4.14 Single Phase (230Vac) Parallel Connection Diagram

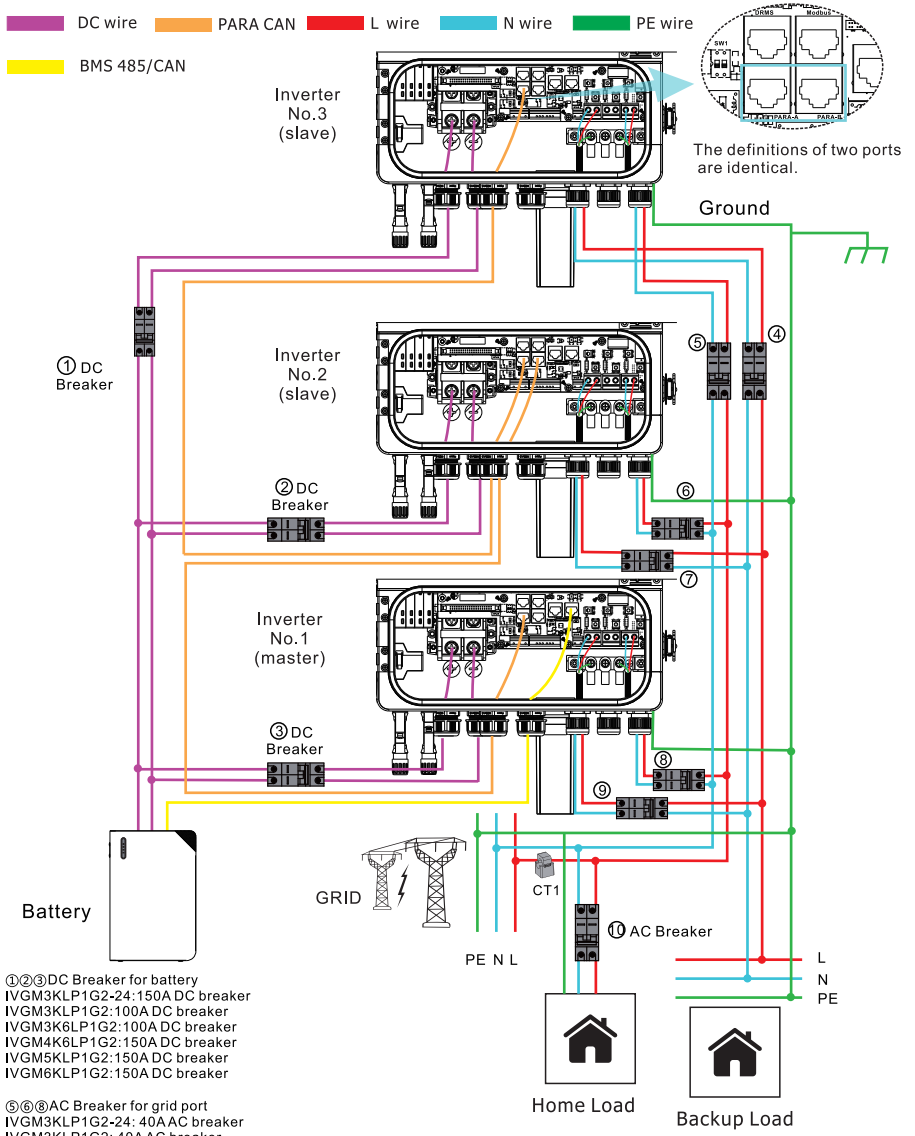

①②③DC Breaker for battery
IVGM3KLP1G2-24:150A DC breaker
IVGM3KLP1G2:100A DC breaker
IVGM3K6LP1G2:100A DC breaker
IVGM4K6LP1G2:150A DC breaker
IVGM5KLP1G2:150A DC breaker
IVGM6KLP1G2:150A DC breaker

⑤⑥⑧AC Breaker for grid port
IVGM3KLP1G2-24: 40A AC breaker
IVGM3KLP1G2: 40A AC breaker
IVGM3K6LP1G2: 40A AC breaker
IVGM4K6LP1G2: 40A AC breaker
IVGM5KLP1G2: 40A AC breaker
IVGM6KLP1G2: 40A AC breaker

④⑦⑨AC Breaker for backup load port
IVGM3KLP1G2-24: 40A AC breaker
IVGM3KLP1G2: 40A AC breaker
IVGM3K6LP1G2: 40A AC breaker
IVGM4K6LP1G2: 40A AC breaker
IVGM5KLP1G2: 40A AC breaker
IVGM6KLP1G2: 40A AC breaker

⑩AC Breaker Depends on Home Load

Master inverter | Slave inverter | Slave inverter

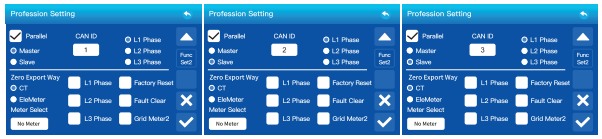

Note: 1.PIN1 & PIN2 of SW1 of the first inverter (No. 1) and the last inverter (No. 3) should be placed in the 'on' position, others in the'OFF'position.
2.CT1 should be connected to CT1(+/-) of the Master inverter.

4.15 Three Phase Parallel Inverter

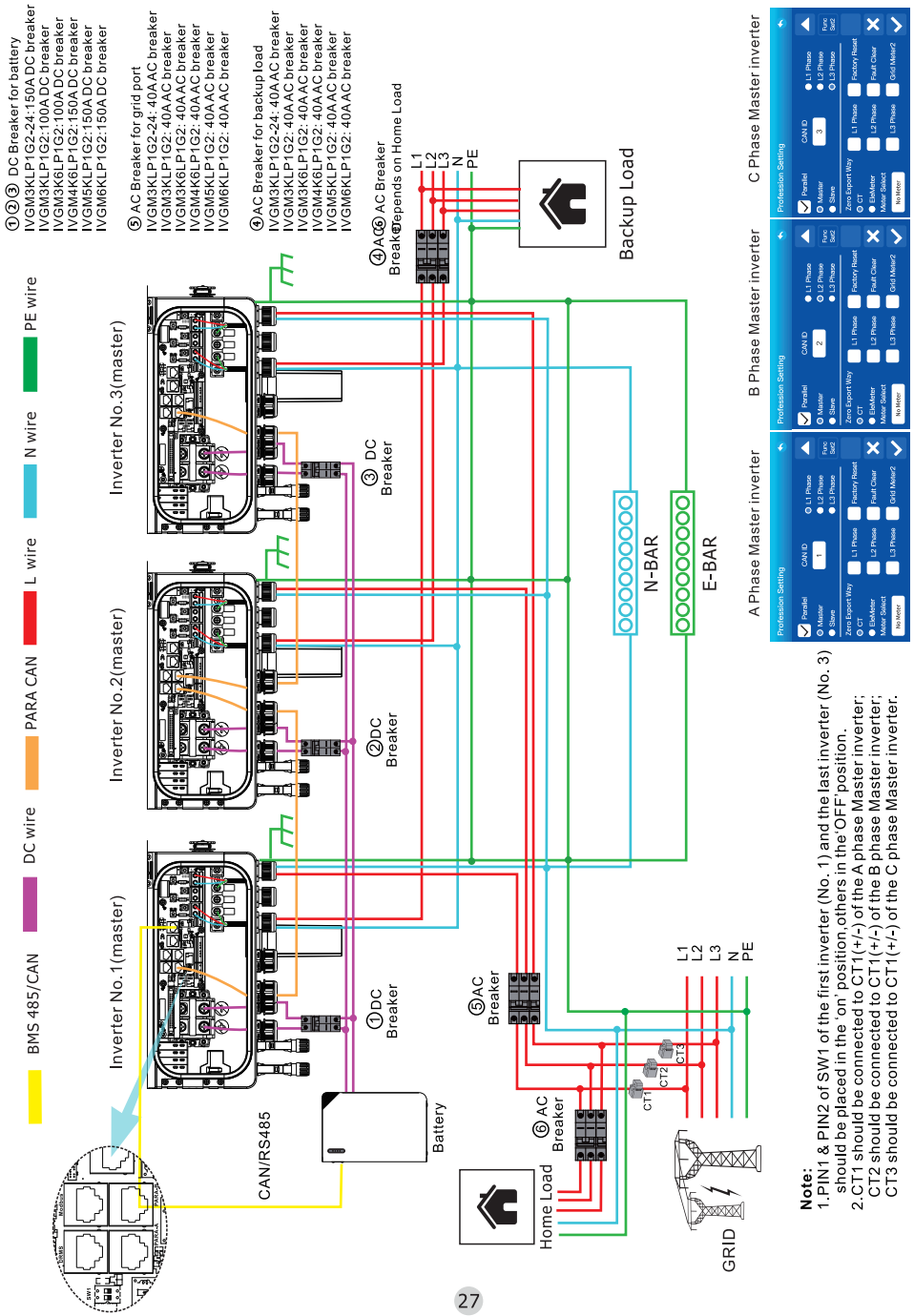

5. Display and Operation

This chapter describes the panel displaying and how to operate on the panel, which involves the LCD display, LED indicators and operation panel.

5.1 Inverter Power ON/OFF

TURN ON the inverter with at least one of the following power sources:
1) Battery 2) PV 3) Grid/Generator

5.1.1 Pre-Commissioning

- Make sure that no high voltage conductors are energized.
- Check all conduit and cable connection points ensure they are tight.
- Verify that all system components have adequate space for ventilation.
- Follow each cable to ensure that they are all terminated in the proper places.
- Verify that the inverter is secured to the wall and is not loose or wobbly.

5.1.2 Inverter Power ON

Step 1: With the PV switch off, energize the PV strings and then measure DC voltage of the PV strings to verify that the voltage and polarity are correct. Turn on the battery and check the battery voltage and polarity as well.
Step 2: Turn on the AC breaker for the system and then measure the AC voltages cable to cable and cable to neutral. The backup side of the system will be off until commissioning is complete.Turn the AC breaker back off for now.
Step 3: Turn the battery breaker on, the PV switch and then the AC breaker for the system, **press the Power ON/OFF button to turn on the unit.**
This inverter can be powered on by PV only, battery only and Grid only.

5.1.3 Inverter Power OFF

Step 1: Press the Power ON/OFF button to turn off.
Step 2: Turn off the AC breaker to disable AC power to the inverter.
Step 3: Turn off the PV switch of the inverter.
Step 4: Turn off the battery breaker.
Step 5: Use a multimeter to verify that the battery and AC voltages are 0V.

5.2 Operation and Display Panel

Once the unit has been properly installed and the batteries are connected well, simply press ON/OFF button (located on the left side of the case) to turn on the unit. When system without battery connected, but connect with either PV or grid, and ON/OFF button is switched off, LCD will still light up (Display will show Standby), In this condition, when switch on ON/OFF button and select NO battery, system can still working.

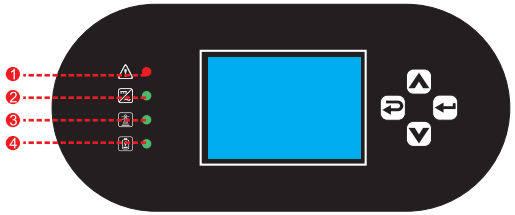

Table 5.2-1 LED indicators

Numeber	LED Indicator		Messages
1	Fault	Red led solid light	Fault
2	DC/AC	Green led solid light	Inverter operation normal
3	GRID	Green led solid light	Grid connection normal
4	BATTERY	Green led solid light	Battery connection normal

Table5.2-2 Function Buttons

Function Key	Description
Esc	To exit setting mode
Up	To go to previous selection， Long press to speed up
Down	To go to next selection， Long press to speed up
Enter	To confirm the selection

5.3 LCD Display Icons

The LCD is touchscreen, below screen shows the overall information of the inverter.

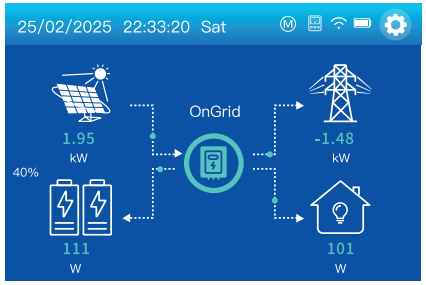

1.The icon in the center of the home screen indicates that the system is Normal operation. If it turns into red and shows "fault", it means the inverter has errors .If it turns into yellow, it means the inverter has warning.And the error or warning message will display under this icon(detail info can be viewed in the System Alarms menu).

2. At the top of the screen is the time (day/month/year,time), and communication connection status.

- Ⓜ or Ⓢ: Parallel system host or slave flag.
- : Smart Meter Communication Success.
- : WIFI communication success.
- : Battery BMS communication success.

3. System Setup Icon, Press this set button, you can enter into the system setup screen which including Basic Setting, Battery Setting, Grid Setting, Work Mode Setting, Gen setting, Profession Setting and Alarm Info.

4. The main screen showing the info including Solar, Grid, Load and Battery. Its also displaying the energy flow direction by arrow.

- PV power and Load power always keep positive.
- Grid power negative means sell to grid, positive means get from grid.
- Battery power positive means charge, negative means discharge.
- Load power positive means discharge,negative means get from Load（only in parallel mode will occur）.

5.4 Power display

This is Solar Panel detail page.

① Solar Panel Generation.
② Voltage, Current, Power for each MPPT.
③ Daily and total PV production.

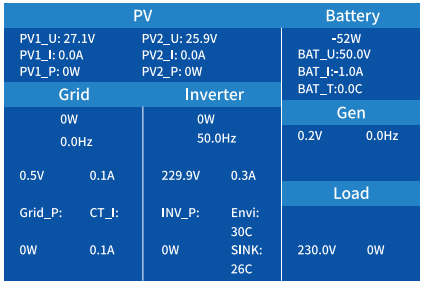

This is Inverter detail page.

① DC/AC inverter module
Voltage, Current, Power for each Phase.
Envi: Ambient temperature inside the machine.
SINK: Heat-sink temperature.

Grid-P, CT-P, INV-P are the active power of each phase

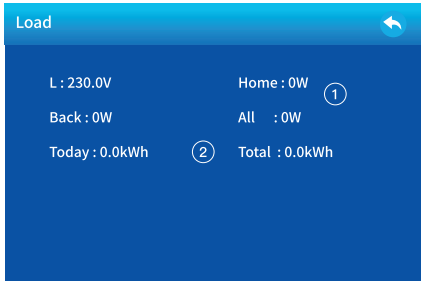

This is Load detail page.

① Voltage,Back-up Power, homeload power, total load Power for each Phase.
② Daily and total backup consumption.

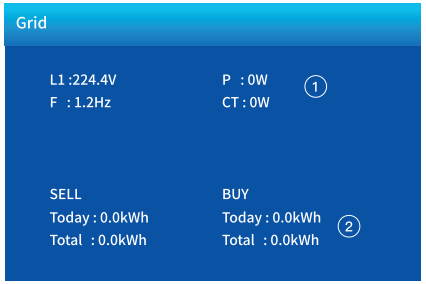

This is Grid detail page.

① L: Voltage for each Phase
CT: Power detected by the external current sensors.
P: Power detected using internal sensors on AC grid in/out breaker.
② BUY: Energy from Grid to Inverter.
SELL: Energy from Inverter to grid.

5.5 Basic Setting

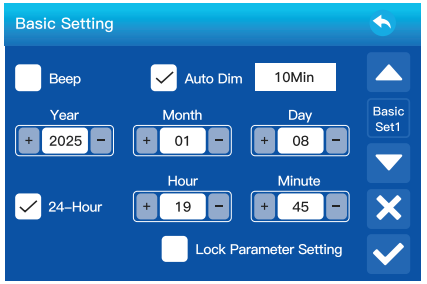

Beep: Used to turn on or off the beep sound in inverter's alarm status.
Lock Parameter Setting: All setting parameters cannot be set up when it is active.

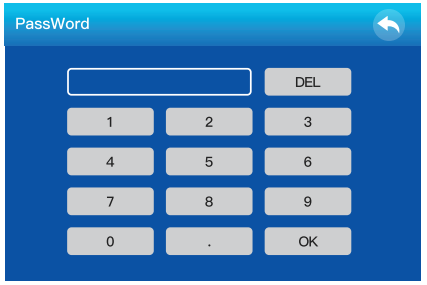

Lock Parameter Setting Password: 123456（Not customizable）
Auto Dim: The backlight of LCD will power off after the set time.

5.6 Battery Setting

note: "Reserve" means This feature is reserved and currently unavailable for configuration.

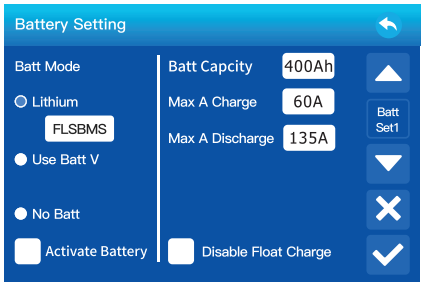

Batt Capacity: Reserved.
Lithium: Use SOC for all battery related settings.
Lithium Mode: This is the BMS communication protocol code which can be confirmed on the "Felicity Solar Approved Battery list " base on the battery model you are using.
Use Batt V: Use battery voltage for all battery related settings.
No Batt: tick this item if no battery is connected to the system.
Max A Charge/ Discharge: Max battery charge/dischargecurrent（0-140A for 3kW /24V model0-70A for 3kW model，0-90A for 3.6kW model, 0-120A for 4.6kW-5kW model,0-135A for 6kw model)
· For AGM and Flooded, we recommend Ah battery size x20%=Charge/Discharge amps.
· For Lithium, we recommend Ah battery size x 50%=Charge/Discharge amps.
· For Gel, follow manufacturer' s instructions.
Activate Battery: This feature will help recover a battery that is over discharged by slowly charging from the solar array or grid.
Disable Float Charge: For the lithium battery with BMS communication, the inverter will keep the charging voltage at the current voltage when the BMS charging current requested is 0. It is used to help prevent battery from being overcharged.

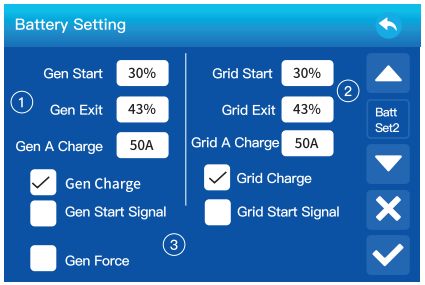

This is Gen Charge Setup page. ①③
Gen Start : Percent SOC below 30% system will Auto Start a connected generator to charge the battery bank.
Gen Exit: When the battery SOC or voltage reaches a preset Gen exit point, the inverter will disconnect the generator.
Gen A Charge: The maximum charging current that the generator can support.
Gen Charge: Use the power of diesel generator to charge the battery.

Gen Start Signal: The normally open relay will close when the battery SOC or voltage drop to the set value of "Start"
Gen Force: When the generator is connected, it is forced to start the generator without meeting other conditions.

This is Grid Charge Setup, you need select. ②
1. Grid Start : When battery SOC or voltage drop to this set value, inverter will start the generator connected to the grid port automatically to charge the battery.
2. Grid Exit: Reserve
3. Grid A Charge: maximum charging current when only use the power fed from the grid port of inverter as the power source, which means using the power of grid or the power of generator connected to the grid port.
4. Grid Charge: It's allowed to use power fed from the grid port, which includes grid or generator connected to the grid port, to charge the battery.
5. Grid Start Signal: When a generator is connected to the grid port of hybrid inverter, this 'Grid signal' can be used to control the dry contact to start or stop the generator.
Note: When connecting the generator to the grid port, settings 1-5 take effect.
When connecting the grid to the grid port, only settings 3 and 4 take effect.

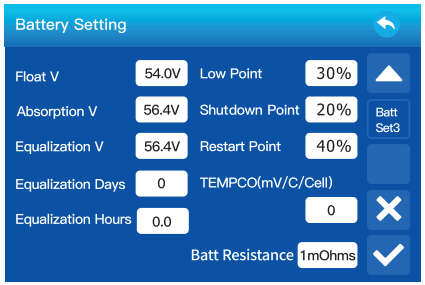

Float V: Battery full charge voltage.
Absorption V: Battery constant charge voltage.
Equalization V: Reserve
Equalization Days: Reserve
Equalization Hours: Reserve
Low Point : The inverter will alarm if the SOC below this value.
Shutdown Point: The inverter will be shut down if the SOC below this value and the solar power can only be used to charge the battery.
Restart Point: The inverter will power the load with battery if the SOC upto this value.
TEMPCO: Reserve
Batt Resistance: Reserve

5.7 Work Mode Setting

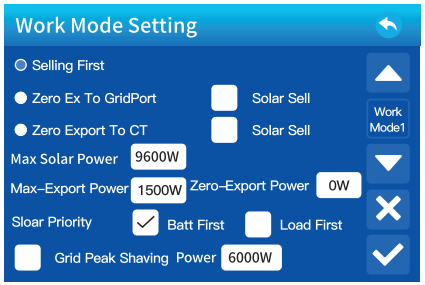

5.7.1

Selling First: This Mode allows hybrid inverter to sell back any excess power produced by the solar panels to the grid. If Time Of Use is active, the battery energy also can be sold into grid.
The PV energy will be used to power the load and charge the battery and then excess energy will flow to grid.
Power source priority for the load is as follows:
1.Solar Panels.
2.Grid. when Solar Priority tick Batt First.
3.Battery (until programable SOC Shutdown Point discharge is reached).
when Solar Priority tick Load First and disable Grid charge.
Zero Ex To GridPort: Hybrid inverter will only provide power to the backup load connected. The hybrid inverter will neither provide power to the home load nor sell power to grid. The built-in CT will detect power flowing back to the grid and will reduce the power of the inverter only to supply the backup load and charge the battery.

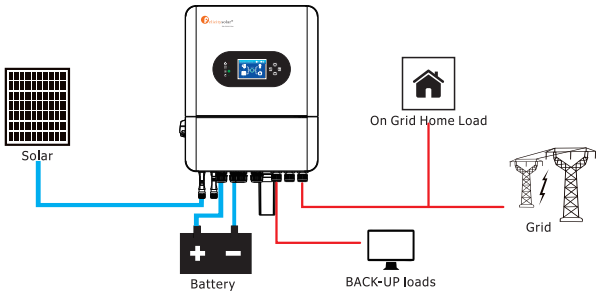

Zero Export To CT: Hybrid inverter will not only provide power to the backup load connected but also give power to the home load connected. If PV power and battery power is insufficient, it will take grid energy as supplement. The hybrid inverter will not sell power to grid. In this mode, a CT is needed. The installation method of the CT please refer to Table 4.7 CT Connection. The external CT will detect power flowing back to the grid and will reduce the power of the inverter only to supply the backup load, charge battery and home load.

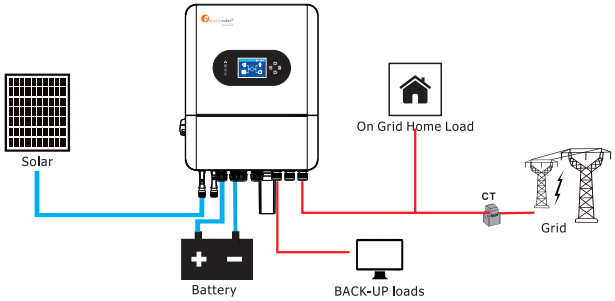

Solar Sell: "Solar sell" is supplement for Zero Ex To GridPort or Zero Export To CT: when this item is active, the surplus PV energy can be sold back to grid too. When it is active, PV Power source priority usage is as follows: load consumption and charge battery and feed into grid.

5.7.2

Max Solar Power: the maximum PV input power allowed.

5.7.3

Max-Export Power: Allowed the maximum output power to flow to grid.
Zero-Export Power: for Zero Ex To Grid Port or Zero Export To CT, and the "Solar sell" is not active. It tells the grid output power threshold to ensure the hybrid inverter won' t feed power to grid. Recommend to set it as 20-100W to ensure the hybrid inverter won' t feed power to grid.

5.7.4

Solar Priority: Priority of PV power usage.
Batt First: PV power is firstly used to charge the battery and then used to power the load. If PV power is insufficient, grid will make supplement for battery and load simultaneously.
Load First: PV power is firstly used to power the load and then used to charge the battery. If PV power is insufficient, grid will make supplement for battery and load simultaneously

5.7.5

Grid Peak Shaving:

1. To use Peak-Shaving on a generator, the equipment MUST be connected to the "GRID" terminal of the inverter.
2. Peak-Shaving helps reduce grid consumption during peak demand by utilizing battery backup power. It can also be used to prevent generator overload above a specified power threshold.
3. Install the CT sensors on grid / generator lines L. The arrows on the CTs MUST point toward the GRID.
4. The IVGM INVERTER supplies power from the batteries whenever the "Power" threshold is met.
5. This mode will automatically adjust the "Grid Charge" amperage (A) to avoid generator overloads during battery charging.
6. Grid Peak-Shaving will automatically enable "Time of Use" and MUST be configured.

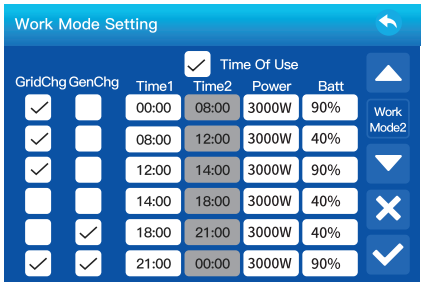

Figure 5.7-4 TOU mode

Time Of Use: it is used to program when to use grid or generator to charge the battery, and when to discharge the battery to power the load. Only tick "Time Of Use" then the follow items (Grid, charge, time, power etc.) will take effect.
Note: when tick Selling First and click Time Of Use, the battery power can be sold into grid.
Charge Source: select grid or diesel generator to charge the battery.

GridChg: Use grid to charge the battery in a time period.
GenChg: Use diesel generator to charge the battery in a time period.
Note: If tick Grid and Gen at the same time, Grid is priority. and only the Gen Charge Enable or Grid Charge Enable is tick in Battery Setting, can the corresponding Gen or Grid tick take effect.
Time1: real time, range of 00:00-24:00.

Power: Max.discharge power of battery allowed.
Batt(V or SOC %): Battery target SOC % or voltage at when the action is to happen.
During the current time period, If the actual SOC or voltage of the battery is lower than the target value, the battery needs to be charged by the ticked source. If the actual SOC or voltage of the battery is higher than the target value, the battery can discharge, and when the solar power is not enough to power the load or the "Selling First "is enabled, the battery will discharge to feed to grid.

For example: as shown on **Figure 5.7-4 TOU mode**
During 00:00-08:00,
if battery SOC is lower than 90%, it will use grid to charge the battery until battery SOC reaches 90%.
During 08:00-12:00,
if battery SOC is higher than 40%, hybrid inverter will discharge the battery until the SOC reaches 40%. At the same time, if battery SOC is lower than 40%, then grid will charge the battery SOC to 40%.
During 12:00-14:00,
if battery SOC is lower than 90%, it will use grid to charge the battery until battery SOC reaches 90%.
During 14:00-18:00,
when battery SOC is higher than 40%, hybrid inverter will discharge the battery until the SOC reaches 40%.if battery SOC is lower than 40%, neither the diesel generator nor the grid will charge the battery.

During 18:00-21:00,
when battery SOC is higher than 40%, hybrid inverter will discharge the battery until the SOC reaches 40%. At the same time, if battery SOC is lower than 40%, then diesel generator will charge the battery SOC to 40%.
During 21:00-00:00,
if battery SOC is lower than 90%, it will use grid or diesel generator to charge the battery until battery SOC reaches 90%.

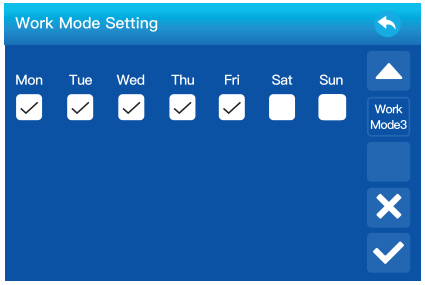

It allows users to choose which day to execute the setting of "Time Of Use".
For example, the inverter will execute the time of use page on Mon/Tue/Wed/Thu/Fri only.

5.8 Grid Setting

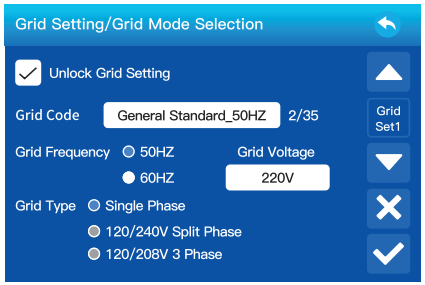

Unlock Grid Settng: Before changing the grid parameters, please enable this with password of 123456. Then it is allowed to change the grid parameters.
Grid Code:

0: Germany_VDE4105,
2: General Standard_50Hz,
3: General Standard_60Hz,
4: Italy_CEI_021_2019,
5: Britain_G99,
6: Australia_A,
7: NewZealand_AS4777,
8: SouthAfrican_NRS097,
9: Netherland_EN 50549-1,
10: Brazil,
11: En50549,
12: Poland_NC_RFG,
13: Czech_CSN 50549-1,
14: Austria_R25:2020-03,
15: Austria_OVE-directive_R25,
16: Spain_NTS_2021,
17: Spain_UNE217001,
18: cNetherland.

Grid Type: The output type of the inverter in off-grid mode.

Grid Voltage:

Only the following option values can be set
This setting value also applies to the AC output voltage.

Grid Type	Single Phase
Gird Voltage	230V
	220V
	240V
	200V

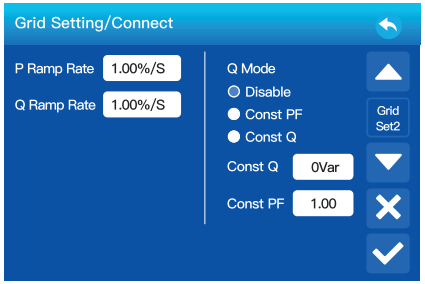

P Ramp Rate: It is the power ramp response to the active power reference in normal running.
Q Ramp Rate: It is the power ramp response to the Reactive power reference in normal running.

Const Q: Setting the reactive power value. Const Q >0 means Inverter output capacitive reactive power, Const Q <0 means Inverter output Inductive reactive power.
Const PF: Setting the power factor(cos φ)value. Const PF>0 means Inverter output Inductive reactive power(or inverter will absorb capacitive reactive power from the power grid),Const PF<0 means Inverter output capacitive reactive power.

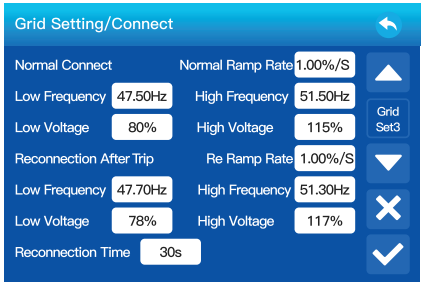

Normal Connect: The allowed grid voltage/frequency range when the inverter operates normally.
Normal Ramp Rate: It is the startup power ramp.
Low Frequency: If the grid frequency is lower than the set point, the inverter disconnects the grid.
High Frequency: If the grid frequency is higher than the set point, the inverter disconnects the grid.
Low Voltage: If the grid voltage is lower than the set point, the inverter will disconnect the grid.
High Voltage: If the grid voltage is higher than the set point, the inverter will disconnect the grid.
Reconnect After Trip: The allowed grid voltage/frequency range for the inverter connects the grid after the inverter trip from the grid.
Re Ramp Rate: It is the reconnection power ramp.
Reconnection Time: The waiting time for the inverter connects the grid again after tripping.

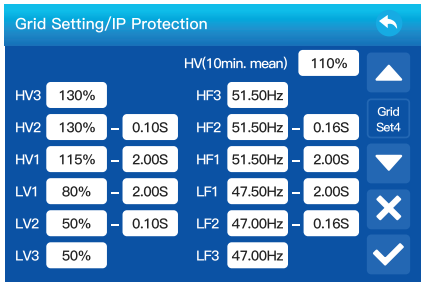

HV1: Level 1 overvoltage protection point;,
HV2: Level 2 overvoltage protection point;
HV3: Level 3 overvoltage protection point.

LV1: Level 1 undervoltage protection point;
LV2: Level 2 undervoltage protection point;
LV3: Level 3 undervoltage protection point.

HF1: Level l over frequency protection point;
HF2: Level2 over frequency protection point;
HF3: Level 3 over frequency protection point.

LF1: Level l under frequency protection point;
LF2: Level2 under frequency protection point;
LF3: Level 3 under frequency protection point.

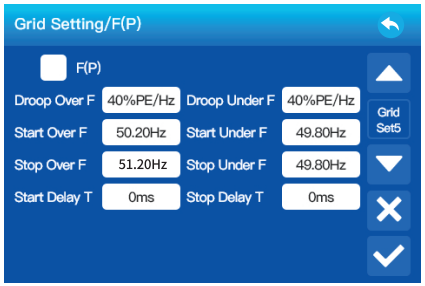

F(P): It's used to adjust the output active power of inverter according to grid frequency.
Droop Over F: percentage of nominal power per Hz
For example, "Start freq F=50.2Hz, Stop freq F=51.2Hz.
Droop F=40%PE/Hz" when the grid frequency reaches51.2Hz, the inverter will decrease its active power at Droop F of 40%. And then when grid system frequency is less than 50.2Hz, the inverter will stop decreasing output power. For the detailed setup values, please follow the local grid code.
Start Over F: Indicates the start of mains overfrequency derating.
Stop Over F: Indicates the end point of the mains over frequency derating.
Start Delay T: delay time of mains frequency response.
Droop Under F: Percentage of under frequency power rise per Hz.
Start Under F: Indicates the start of the mains under frequency rise.
Stop Under F: Indicates the end point of the mains under frequency rise.
Stop Delay T: Delay time for stopping mains frequency response.

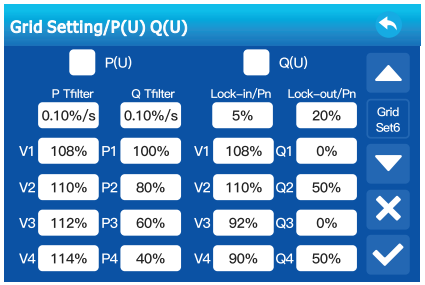

P(U): It is used to adjust the inverter's active power according to the set grid voltage
Q(U): It is used to adjust the inverter's reactive power according to the set grid voltage.These two functions are used to adjust inverter's output power (active power and reactive power) when grid voltage changes.
Lock-in/Pn 5%: When the inverter active power is less than 5% rated power, the V(Q) mode will not take effect.
Lock-out/Pn 20%: If the inverter active power is increasing from 5% to 20% rated power, the V(Q) mode will take effect again.

For example: V2=110%, P2=80%. When the grid voltage reaches 110% of the rated grid voltage, inverter will reduce its active power output to 80% of the rated power.
For example: V1=108%, Q1=0%. When the grid voltage reaches 108% of the rated grid voltage inverter will output reactive power that accounts for 0% of the rated power. For the detailed setup values, please follow the local grid code.

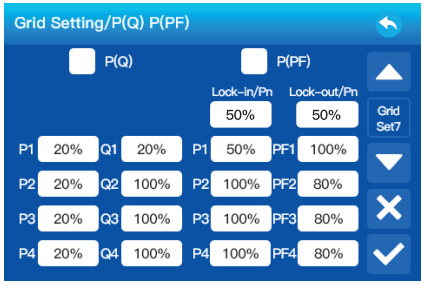

P(Q): it is used to adjust the output reactive power of inverter according to the set active power.
P(PF): It is used to adjust the PF of inverter according to the set active power.For the detailed setup values, please follow the local grid code.
Lock-in/Pn 50%: When the output active power of inverter is less than 50% of inverter's rated power, it won't enter the P(PF) mode.
Lock-out/Pn 50%: When the output active power of inverter is higher than 50% of inverter's rated power,it will enter the P(PF) mode.

Note : only when the grid voltage is equal to or higher than 1.05 times of the rated grid voltage, then the P(PF)mode will take effect.

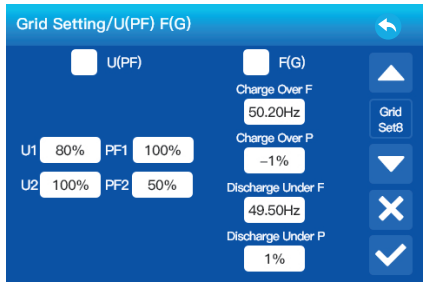

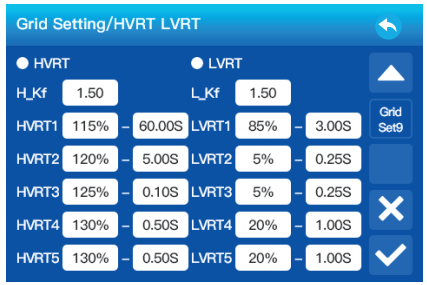

Reserved: This function is reserved.It is not recommended.

5.9 Gen Port Setting

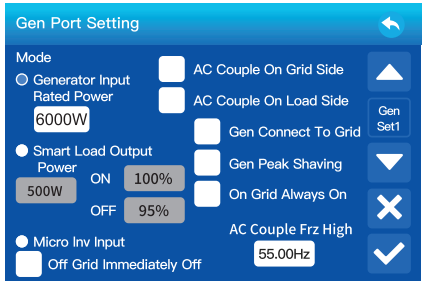

Generator Input Rated Power: allowed Max. power from diesel generator.
AC Couple On Grid Side: Reserved
AC Couple On Load Side: Use the Load port as an AC couple input port, which can be connected with micro-inverter or other on-grid inverter.
Gen Connect To Grid: connect the diesel generator to the grid input port.
Gen Peak Shaving: Limit the maximum output power of the generator to the set rated power , the rest of power consumption will be provided by inverter to ensure that the generator will not overload.
On Grid Always On: When click "on Grid always on" the smart load will switch on when the grid is present.
AC Couple Frz High: If choosing "Micro Inv Input", as the battery SOC reaches gradually setting value (OFF), During the process, the microinverter output power will decrease linear. When the battery SOC equals to the setting value (OFF) the system freguency will become the setting value (AC Couple Fre High) and the Microinverter will stop working. Stop exporting power produced by the microinverter to the grid.
Smart Load Output: This mode utilizes the Gen input connection as an output which only receives power when the battery SOC and PV power is above a user programmable threshold.
e.g.Power=500W,ON: 100%, OFF=95%: When the PV power exceeds 500W, and battery bank SOC reaches 100%, Smart Load Port will switch on automatically and power the load connected. When the battery bank SOC<95% or PV power< 500w, the Smart Load Port will switch off automatically.

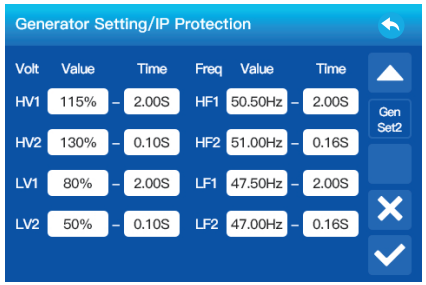

HV1: Level 1 overvoltage protection point and protection time;
HV2: Level 2 overvoltage protection point and protection time;
LV1: Level 1 undervoltage protection point and protection time;
LV2: Level 2 undervoltage protection point and protection time;
HF1: Level 1 over frequency protection point and protection time;
HF2: Level 2 over frequency protection point and protection time;
LF1: Level 1 under frequency protection point and protection time;
LF2: Level 2 under frequency protection point and protection time.

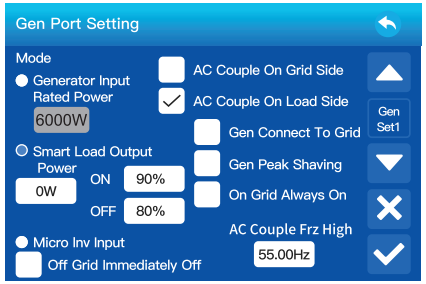

Smart Load OFF Batt
• Battery SOC or voltage at which the Smart load will switch off.
Smart Load ON Batt
• Battery SOC or voltage at which the Smart load will switch on.

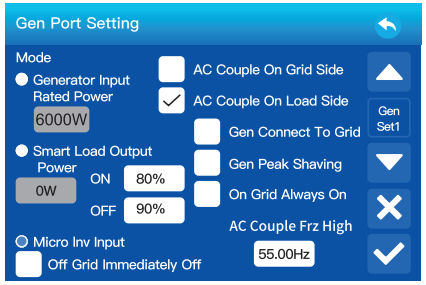

Micro Inv Input: Use the GEN port as an AC couple input port which can be connected with micro-inverter or other Grid-Tied inverter.
***Micro Inv Input ON:** When the hybrid inverter operates in off-grid mode and the SOC or voltage of battery drops to this set value,the relays on GEN port of hybrid inverter will turn to normally closed(ON), then the Grid-Tied inverter will generate solar power and feed into hybrid inverter. When the hybrid inverter operates in on-grid mode, this parameter will be invalid, the relays on GEN port of hybrid inverter will always be normally closed(ON),Grid-Tied inverter can operate normally.
***Micro Inv Input OFF:** When the hybrid inverter operates in off-grid mode and the SOC or voltage of battery upto this set value,the relays on GEN port of hybrid inverter will turn to normally open (OFF), then the Grid-Tied inverter will Stop to work. When the hybrid inverter operates in on-grid mode, this parameter will be invalid, the relays on GEN port of hybrid inverter will always be normally closed(ON),Grid-Tied inverter can operate normally.
Off grid immediately off: the smart load will stop working immediately when the grid is disconnected if this item is active.

5.10 Profession Setting

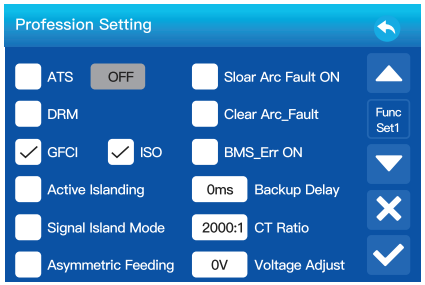

ATS: It is related with ATS port voltage. it is better in "uncheck" position.
DRM: Only for AS4777 standard.
GFCI: the ground-fault circuit interrupter function.
ISO: the PV and the battery wiring terminals Positive to ground and negative to ground insulation impedance detection.
Active Islanding: Active islanding detection enable or not.
Asymmetric Feeding: Reserved
Sloar Arc Fault ON: Arc Detection and Protection Function, if the arc intensity exceeds the threshold, a fault will be triggered. If the arc intensity drops below the threshold and remains for 5 minutes, the fault will be automatically restored.
After 5 arc fault events, the fault will be latched and can only becleared manually
(To manually clear, please enable "Clear Arc_Fault").
Clear Arc_Fault: Clear Arc_Fault.
BMS_Err ON: When it is active, if the battery BMS failed to communicate with inverter, the inverter will stop working and report fault.
Backup Delay: When the grid cuts off, the inverter will output power after the set time.
For example, backup delay: 600ms. the inverter will give output power after 600ms when the grid cuts off.
CT Ratio: The CT ratio of the zero-export to CT mode,(Standby mode effective).
Voltage Adjust: if the inverter is working at off grid, we can adjust the output voltage by Voltage Adjust.

Signal Island Mode:when "signal island mode" is checked and the inverter connects the grid, the ATS port voltage will be 0. When "signal island mode" is checked and the inverter disconnected from the grid, the ATS port voltage will output 240Vac voltage. With this feature and outside NO type relay, it can realize N and PE disconnection or bond.

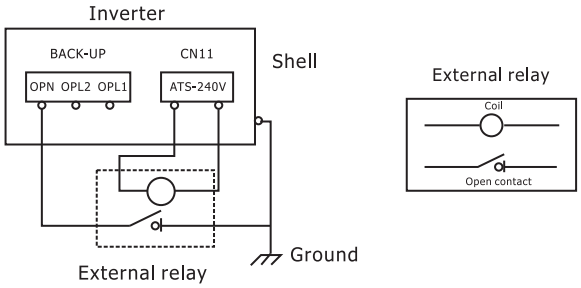

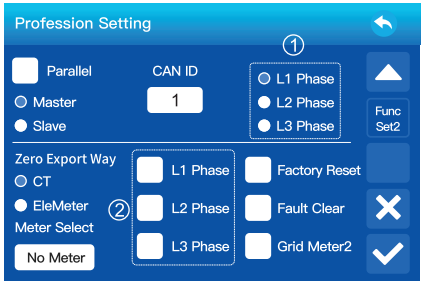

Parallel: To expand system capacity, click the parallel. In a parallel system, there can only be one Master for one phase, and the others must be set as Slaver, set a unique CAN ID to each inverter, the CAN ID is from 1 to 10.
Master: Select any hybrid inverter in the parallel system as the master inverter, then Changes to the master inverter will automatically synchronize to other slave inverters.
Slave: Set the other inverters managed by the master inverter as slave inverter.
①Parallel system output phase selection.
L1: Used for three-phase parallel.
L2: Used for three-phase parallel.
L3: Used for three-phase parallel.
CAN ID: The Modbus address of each inverter, should be different.
EleMeter For CT: when using zero-export to CT mode,the hybrid inverter can select Ele Meter For CT function and so far we only support CHINT&Eastron smartmeter.
Meter Select: Select the corresponding meter type according to the meter installed in the system.
Zero Export Way: To CT mode can be used to select anti-reverse current mode for inverter, either CT or electric meter.
②Parallel system CT phase line selection
L1: Reserved
L2: Reserved
L3: Reserved
Factory Reset: check it when inverter in stand by mode(Password:123456), then press "enter" button
Fault Clear: When it is active, the inverter will restart.
Grid Meter2: When there's a string inverter AC couple at the grid or load side of hybrid inverter and there's a meter installed for the string inverter, then the hybrid inverter LCD will show the string inverter output power on its PV icon. **The smartmeter of string inverter's should be the same as hybrid inverter's**

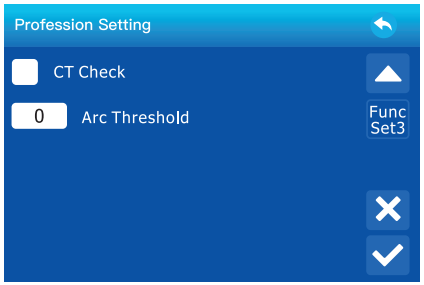

CT Check:
The inverter checks the direction and phase sequence of the current transformer (CT)

Are Threshold:
Arc Alarm Threshold Setting (All Channels)

5.11 Device Info Setup Menu

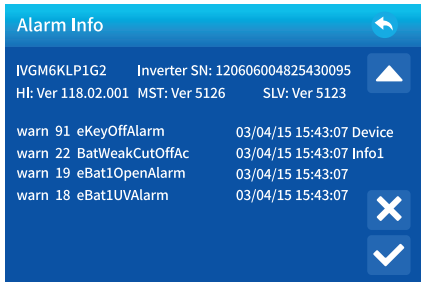

This page show Inverter SN, Inverter version and alarm codes.
HMI: LCD version
MST: Master DSP Software Version
SLV: Slave DSP Software Version

6. System Application

Mode I:Basic

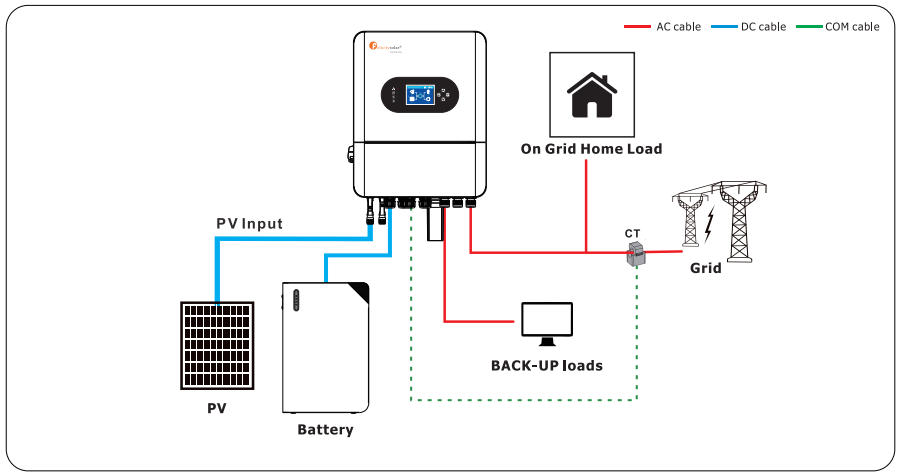

With Export to CT mode,the hybrid inverter can provide power not only to the home load on the main side, but also to the critical load on the backup side.And excess energy feeds to Grid.

Mode II:With Generator

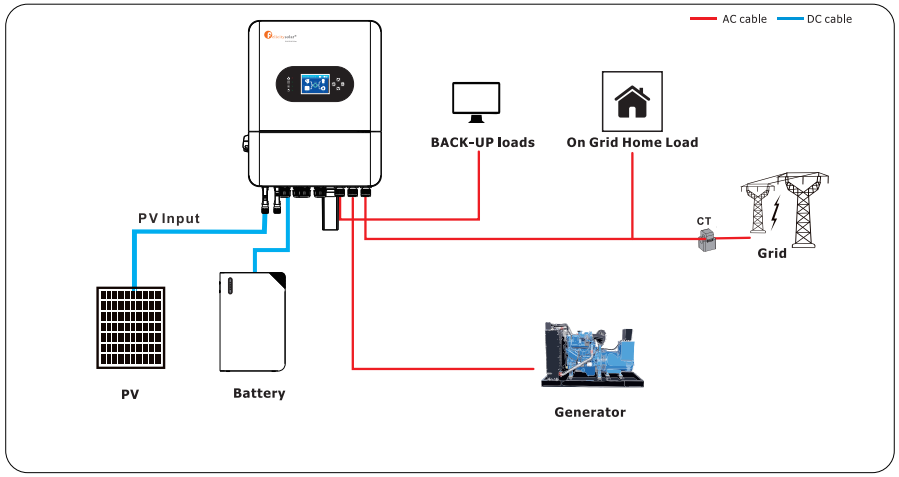

Generators greater than 6KW (On "GEN" Input)
1.50A rated GEN Relay.
2.A THD (Total Harmonic Distortion) of less than 15% is required for stable operation.

Generators Greater than 6kW(On "GRID" Input)
1. Optimal way to integrate generators for Off-Grid or Grid-Tied systems with automatic or manual transfer switches.
2. Programming "GEN Connect to Grid Input" and generator connected to grid port.

3. DO NOT use "Sell to Grid" when generator is connected to the GRID input, can cause potential damage the generator.
Installation of CT sensors on generator lines is only required if "Peak Shaving" is intended to be used.

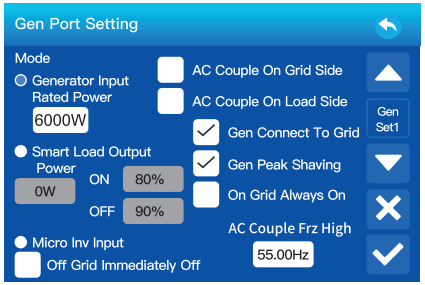

Mode III:With Smart-Load

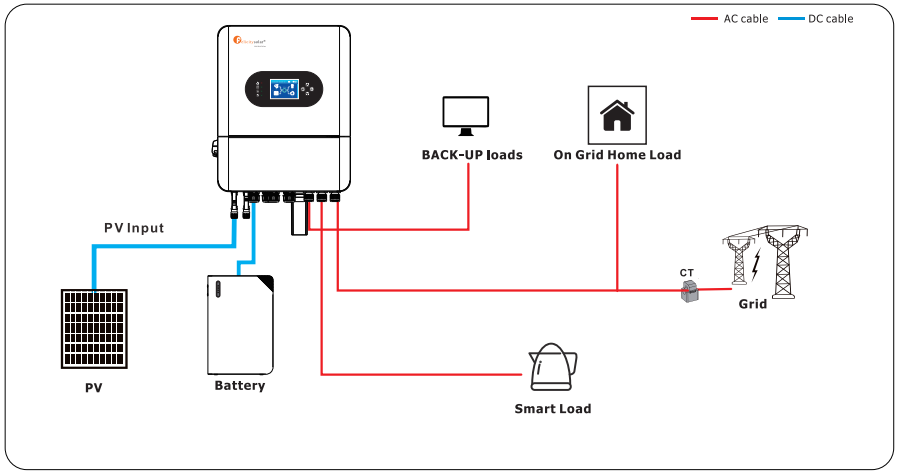

1. This mode uses the **"Generator"** input as a load output that delivers power when the battery exceeds a user programmable threshold or when the IVGM INVERTER is connected to the grid.
2. When **"Smart Load Output"** is enabled, the "GEN" input turns into an output to power high power loads such as a water heater, irrigation pump, AC unit, pool pump, or any other load.
3. When **"On Grid Always On"** is enabled, the "GEN" terminal will always output power as long as the grid is connected, regardless of battery charge.

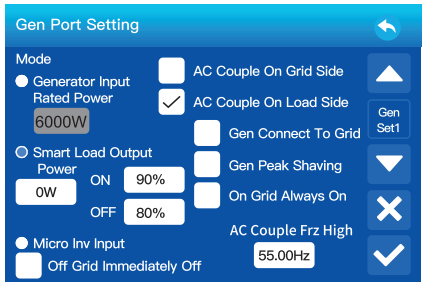

Mode IV: AC Couple

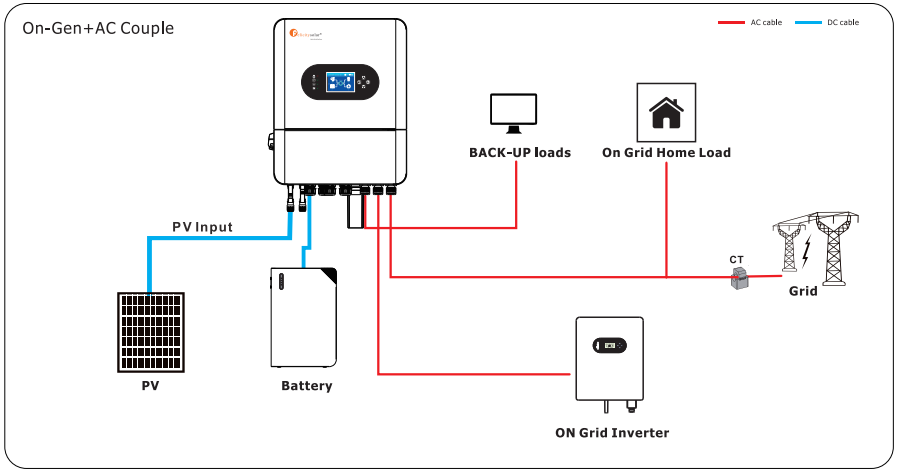

The IVGM INVERTER supports the addition of grid-tied solar inverters, this allows the systems total solar power input to be expanded by coupling micro or string inverters into the "GEN" terminals of the inverter.

An entirely AC-coupled solar system is not recommended as power control and monitoring is limited but is supported. Having DC-coupled modules, or a combination of DC-coupled modules and AC-coupled inverters is always preferred. AC-coupled inverters used in this application need to be either EN 50549 or VDE 4105 certified. This certification confirms the inverters' ability to disconnect from the grid based on frequency and ensures that the IVGM INVERTER will safely be able to frequency shift to control the AC coupled production.
In off-grid systems or during grid-forming operation, the IVGM INVERTER uses frequency shifting to curtail and shutdown AC-coupled inverters when the battery is full, allowing AC-coupled solar to produce power in an outage scenario. When the IVGM INVERTER is connected to the grid any AC-coupled inverters connected will always sell all excess solar power back to the grid. Selecting "Limited to Load" will NOT limit production when AC coupled.

AC Coupling on the GRID Side
Installing AC coupled inverters upstream of the GRID port of the IVGM INVERTER, such as with a load or supply side connection, is supported for grid connected systems but has some notable limitations when using the inverter for backup or grid-forming mode:
- Does NOT allow the usage of grid-tied inverter production during grid outages to charge batteries or power loads.
- Does NOT allow monitoring of PV production in inverter and Fsolar monitoring.

AC Coupling on the GEN Terminal
AC Coupling via the GEN Terminal is the preferred method for integrating AC-coupled solar on the IVGM INVERTER. This method offers several key advantages:
- Allows the usage of grid-tied inverter production during grid outages.
- Allows the integration of grid-tie inverters in off-grid systems.
Using the GEN terminal also allows for comprehensive monitoring of solar production, giving users valuable insights into the system's performance.

7. Warranty

As to Warranty terms, please refer to <General Warranty Agreement>.
Under the guidance of our company, customers return our products so that our company can provide service of maintenance or replacement of products of the same value. Customers need to pay the necessary freight and other related costs. Any replacement or repair of the product will cover the remaining warranty period of the product. If any part of the product or product is replaced by the company itself during the warranty period, all rights and interests of there placement product or component belong to the company.

Factory warranty does not include damage due to the following reasons:
- Damage during transportation of equipment;
- Damage caused by incorrect installation or commissioning;
- Damage caused by failure to comply with operation instructions, installation instructions or maintenance instructions;
- Damage caused by attempts to modify, alter or repair products;
- Damage caused by incorrect use or operation;
- Damage caused by insufficient ventilation of equipment;
- Damage caused by failure to comply with applicable safety standards or regulations;
- Damage caused by natural disasters or force majeure (e.g. floods, lightning, over voltage, storms, fires, etc.)

In addition, normal wear or any other failure will not affect the basic operation of the product. Any external scratches, stains or natural mechanical wear does not represent a defect in the product.

8. Troubleshooting

Perform troubleshooting according to the solutions in the table below. Contact the after-sales service if these methods do not work.
Collect the information below before contacting the after-sales service, so that the problem scan be solved quickly.
- Inverter information like serial number, firmware version, installation date, fault time, fault freguency,etc.
- Installation environment, including weather conditions, whether the PV modules are sheltered or shadowed, etc. It is recommended to provide some photos and videos to assist in analyzing the problem.
- Utility grid situation.

9. Download the APP

Method 1: Access https://download.felicitysolar.com using the mobile phone browser and download the latest installation package.
Method 2: Scan the following QR code and download the latest installation package.

Please refer the Fsolar End user manual, register the installer and create a plant and owner (skip this step if the account has been created). You can obtain the Fsolar End user manual by scanning the following QR code.

10. Warning Code

The inverter's fault LED does not remain lit, but an error code flashes on the screen.
In most cases, these codes indicate warnings rather than actual faults

Warning Code	Warning Information	Trouble shooting
18	Battery Under Voltage Alarm	Battery voltage is too low, the battery should be charged
19	Battery Open Circuit Alarm	Battery open, check battery wiring
20	Battery SOC Low Alarm	Battery SOC is too low, battery should be recharged
21	BMS communication Alarm	Abnormal communication between battery and inverter in non-SOC mode, check battery and inverter wiring.
22	Battery Under Voltage Alarm or Battery SOC Low Alarm	Battery voltage is too low or Battery SOC is too low, the battery should be charged
33	Grid Over Voltage Alarm	Grid voltage is too high, check if the grid voltage is within the normal range
34	Grid Under Voltage Alarm	Grid voltage is too low, check if the grid voltage is within the normal range
35	Grid Over Frequency Alarm	Grid frequency is too high, check if the grid frequency is within the normal range
36	Grid Under Frequency Alarm	Grid frequency is too low, check if the grid frequency is within the normal range

38	Grid Reverse Sequence Alarm	Grid phase sequence reversed, check grid phase sequence wiring
43	Active Islanding Alarm	When the power grid experiences an AC power outage, the device detects islanding proactively.
44	Low Voltage Crossing Alarm	Entering LVRT at grid connection, the inverter absorbs reactive power from the grid
48	Buckup Overload Alarm	The load is overloaded and should be reduced
57	Gen Over Voltage Alarm	Generator voltage is too high, check whether the generator voltage is within the normal range
58	Gen Under Voltage Alarm	Generator voltage is too low, check whether the generator voltage is within the normal range
59	Gen Over Frequency Alarm	Generator frequency is too high, check whether the generator frequency is within the normal range
60	Gen Under Frequency Alarm	Generator frequency is too low, check whether the generator frequency is within the normal range
62	Gen Reverse Sequence Alarm	Generator phase sequence reversed, check generator phase sequence wiring
67	GEN Over Load Alarm	Please check whether the load on backup port exceeds the generator specifications.
83	Radiator over-temperature derating alarm	The inverter will reduce power if the heat sink temperature is too high.
86	Fan1 Failed Alarm	Fan 1 malfunction, check fan for proper functioning
87	Fan2 Failed Alarm	Fan 2 malfunction, check fan for proper functioning
91	Push-button shutdown alarm	
92	Remote Shutdown Alarm	Remote shutdown
93	Flash is not burned	Flash is not burned, contact the maintenance centre.

11. Fault Code

The inverter's fault indicator light is solid red, and a fault code is flashing on the screen.
Please follow the steps in the table below.
If the issue persists, contact Felicity's official technical support team immediately.

Warning Code	Warning Information	Trouble shooting
05	PV over current fault	1. Restart the system 2~3 times; 2. If the fault still exists, please contact us for help;
17	Arc Fault	1.Check PV module cable connection and clear the fault (To manually clear, please enable "Clear Arc_Fault"); 2. If the fault still exists, please contact us for help;
18	PV short circuit fault	1. Restart the system 2~3 times; 2. If the fault still exists, please contact us for help;
25	Battery over voltage fault	1. Check the Battery voltage is in the range of standard voltage in specification; 2. Check whether Battery cables are firmly and correctly connected; 3. Seek help from us, if can not go back to normal state;
27	Battery over Current fault	1. Restart the system 2~3 times; 2. If the fault still exists, please contact us for help;
28	Bat hardware overcurrent	1. Restart the system 2.3 times; 2. If the fault still exists, please contact us for help;
31	LLC over Current fault of hardware	1. Restart the system 2~3 times; 2. If the fault still exists, please contact us for help;
32	BMS communication fault	1. Check whether BMS communication cable is firmly and correctly connected; 2. Seek help from us, if can not go back to normal state;
37	LLC soft start failure	1. Restart the system 2~3 times; 2. If the fault still exists, please contact us for help;
40	BAT short circuit	1. Check whether the battery port is in short circuit; 2. If the fault still exists, please contact us for help;
41	BUS over voltage fault	1. Restart the system 2~3 times; 2. If the fault still exists, please contact us for help;
43	BUS under voltage fault	1. Restart the system 2~3 times; 2. If the fault still exists, please contact us for help;

49	INV over Current of software	1. Please check whether the load power is within the range; 2. Restart and check whether it is in normal; 3. Seek help from us, if can not go back to normal state;
50	INV over Current of hardware	1. Please check whether the load power is within the range; 2. Restart and check whether it is in normal; 3. Seek help from us, if can not go back to normal state;
51	INV soft start failure	1. Restart the system 2~3 times; 2. If the fault still exists, please contact us for help;
52	AC voltage DC component fault	1. Restart the system 2~3 times; 2. If the fault still exists, please contact us for help;
53	AC current DC component fault	1. Restart the system 2~3 times; 2. If the fault still exists, please contact us for help;
54	INV over voltage fault	1. Restart the system 2~3 times; 2. If the fault still exists, please contact us for help;
55	INV under voltage fault	1. Please check whether the load power is within the range; 2. Restart and check whether it is in normal; 3. Seek help from us, if can not go back to normal state;
56	INV short circuit fault	1. Please check the connection of buckup is firmly and correctly; 2. Restart and check whether it is in normal; 3. Seek help from us, if can not go back to normal state;
57	Grid overload fault	1. Please check whether the load power is within the range; 2. Restart and check whether it is in normal; 3. Seek help from us, if can not go back to normal state;
58	Buckup overload fault	1. Please check whether the load power is within the range; 2. Restart and check whether it is in normal; 3. Seek help from us, if can not go back to normal state;
65	Heatsink high temperature fault	1. Check whether the work environment temperature is too high; 2. Turn off the inverter for 15mins and restart; 3. Seek help from us, if can not go back to normal state;
67	Main and auxiliary DSP communication fault	1. Restart the system 2~3 times; 2. If the fault still exists, please contact us for help;
68	MCU communication fault	1. Restart the system 2~3 times; 2. If the fault still exists, please contact us for help;

69	Eeprom fault	1. Restart the system 2~3 times; 2. If the fault still exists, please contact us for help;
70	AC leakage current sensor fault	1. Restart the system 2~3 times; 2. If the fault still exists, please contact us for help;
71	AC leakage current fault	1. Check PV side cable ground connection; 2. Restart the system 2~3 times; 3. If the fault still exists, please contact us for help;
72	Grid Relay open circuit fault	1. Restart the system 2~3 times; 2. If the fault still exists, please contact us for help;
74	INV Relay self check fault	1. Restart the system 2~3 times; 2. If the fault still exists, please contact us for help;
76	GEN Relay self check fault	1. Restart the system 2~3 times; 2. If the fault still exists, please contact us for help;
77	PV Insulation Impedance fault	1. Check the connection of PV panels and inverter is firmly and correctly; 2. Check whether the PE cable of inverter is connected to ground; 3. Seek help from us, if can not go back to normal state;
78	Grid wrong Connect to buckup	1. Check whether Backup cables are firmly and correctly connected; 2. Restart the system 2~3 times; 3. Seek help from us, if can not go back to normal state;
79	Generator port is connected to the generator or Grid whenthe mode is the smart load mode	1. Check whether GEN cables are firmly and correctly connected; 2. Restart the system 2~3 times; 3. Seek help from us, if can not go back to normal state;
82	NTC open circuit	1. Restart the system 2~3 times; 2. If the fault still exists, please contact us for help;
83	AFCI module communication failure or self-test failed	1. Check the wiring of the AFCI module; 2. Check that the AFCI module is operating properly; 3. If the fault still exists, please contact us for help;
85	External CT Sensor Fault	1. Check the connection of CT is firmly and correctly; 2. Seek help from us, if can not go back to normal state;
86	system parameters change	Grid setting or Bat setting change, and the system will restrat after 20ms

87	RSD fault	1.Please check whether External RSD signal triggers shutdown; 2.If not, restart the inverter; 3.If the fault still exists, please contact us for help.
88	Parallel system error	1.Please check whether other inverter is in error state; 2.Restart the system; 3.If the fault still exists, please contact us for help
89	Parallel Can Communication failure	1. Check whether Parallel cables are firmly and correctly connected; 2. Restart the system 2~3 times; 3. Seek help from us, if can not go back to normal state;
90	Parallel Host Lost	1. Check whether Parallel cables are firmly and correctly connected; 2. Restart the system 2~3 times; 3. Seek help from us, if can not go back to normal state;
91	Parallel Sync Signal lost	1. Check whether Parallel cables are firmly and correctly connected; 2. Restart the system 2~3 times; 3. Seek help from us, if can not go back to normal state;
92	Parallel Version is inconsistent	1. Check whether the software version of the inverter is same; 2. Restart the system 2~3 times; 3. Seek help from us, if can not go back to normal state;
93	Parallel Setting is inconsistent	1. Check whether Parallel cables are firmly and correctly connected; 2. Check whether the software version of the inverter is same;; 3. Restart the system 2~3 times; 4. Seek help from us, if can not go back to normal state;
94	CAN ID Conflict	1.Please check whether CAN ID of different inverters is same, 2.Please check whether there are two masters in one phase;
95	Parallel PWM signal lost	1.Please check whether the parallel cables are well-connected. 2.Restart the system; 3.If the fault still exists, please contact us for help.
96	Phase sequence abnormal	1.Please check whether the grid wires are well-connected; 2.Please check whether the grid phase sequence is correct, 3.Restart the system; 4.If the fault still exists, please contact us for help.

Appendix I

Model	IVGM3K LP1G2-24	IVGM3K LP1G2	IVGM3K6 LP1G2	IVGM4K 6LP1G2	IVGM5K LP1G2	IVGM6K LP1G2
Battery Input Data						
Battery Type	Lead-acid or Lithium-ion					
Battery Voltage Range(V)	20-30	40-60				
Max.Charging Current(A)	140	70	90	115	120	135
Max.Discharging Current(A)	140	70	90	115	120	135
Charging Strategy for Li-ion Battery	Self-adaption to BMS					
Number of battery input	1					
PV String Input Data						
Max. PV Access Power(W)	6000	6000	7200	9200	10000	12000
Max PV Input Power(W)	4800	4800	5760	7360	8000	9600
Max PV Input Voltage(V)	500					
Start-up Voltage(V)	125					
MPPT Voltage Range(V)	150-425					
Rated PV Input Voltage(V)	370					
Max Input Short-Circuit Current(A)	27		27+27			
Max Operating PV Input Current(A)	18		18+18			
No.of MPP Trackers/No.of String Per MPP Tracker	1/1		2/1+1			
Grid Data						
Rated AC Input/Output Active Power(W)	3000		3680	4600	5000	6000
Rated AC Input/Output Apparent Power(VA)	3000		3680	4600	5000	6000
Max AC Input/Output Apparent Power(VA)	3300		3680	5060	5500	6600
Peak Power (off-grid)(W)	2 times of rated power,10s					
Rated AC Input/Output Current(A)	13.7/13.1		16	20.9/20	22.8/21.8	27.3/26.1
Max AC Input/Output Current(A)	15/14.4		16	23/22	25/24	30/28.7
Max Continuous AC Passthrough (grid to load)(A)	35					40
Rated Input/Output Voltage/Range(V)	220V/230 0.85Un-1.1Un					
Grid Connection Form	L+N+PE					
Rated Input/Output Grid Frequency/Range	50Hz/45Hz-55Hz 60Hz/55Hz-65Hz					
Power Factor Adjustment Range	0.8 leading to 0.8lagging					
Total Current Harmonic Distortion THDi	<3% (of nominal power)					
DC Injection Current	<0.5%In					

Efficiency	
Max. efficiency	97.6%
Euro efficiency	96.5%
MPPT efficiency	>99%
Equipment Protection	
DC Reverse Polarity Protection	Integrated
AC Output Overcurrent Protection	Integrated
Thermal Protection	Integrated
AC Output Overvoltage Protection	Integrated
AC Output Short Circuit Protection	Integrated
DC Component Monitoring	Integrated
Arc Fault Circuit Interrupter (optional)	Integrated
Anti-islanding Protection	Integrated
DC Switch	Integrated
Insulation Impedance Detection	Integrated
Residual Current Detection	Integrated
Surge Protection Level	TYPE II(DC),TYPE II(AC)
Interface	
Communication Interface	RS485/RS232/CAN
Monitor Mode	WIFI/Bluetooth
General Data	
Operating Temperature Range	−40 to+60℃,>45℃ Derating
Permissible Ambient Humidity	0~100%
Permissible Altitude	2000m
Noise	<30dB
Ingress Protection(IP) Rating	IP65
Inverter Topology	Non-Isolated
Over Voltage Category	OVC II(DC),OVC III(AC)
Net welght[kg]	19.8
Gross Weight[kg]	24.5
Product Dimension[mm]	470x376x231
Package Dimension[mm]	593x454x348
Warranty[1]	5 Years/10 Years the Warranty Period Depends the Final Installation Site of Inverter, More Info Please Refer to Warranty Policy
Type Of Cooling	natural cooling
Grid Regulation	IEC 61727,IEC 62116,CEI 0-21,EN 50549，NRS 097,RD 140, UNE 217002,OVE-Richtlinie R25,G98,G99,VDE-AR-N 4105
Safety EMC/Standard	IEC/EN 61000-6-1/2/3/4, IEC/EN 62109-1, IEC/EN 62109-2

Appendix II

1. Split Core Current Transformer (CT) dimension:(mm)
2.Secondary output cable length is 4m.
3.Accessory CT rated current ratio 100A/50mA, corresponding to CT ratio value 2000:1.

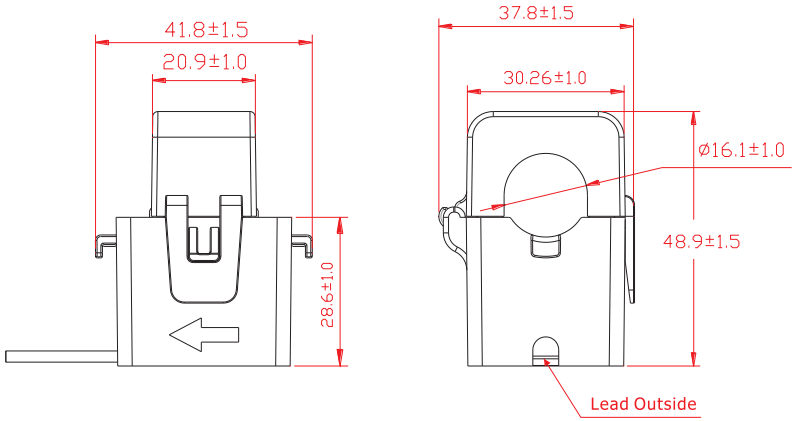

Appendix III

Arc Detection and Protection Function	
Standard	IEC 63027
Protection coverage	Full coverage
Method of implementation	Integrated
Functionality	AFPE
Monitored Strings	2
Input ports	2
Monitored channels	1
Self-test Function	After the module is powered on for 5 seconds,it automatically sends the self-test result to thespecified register, After receiving the data, theinverter judges whether to report a fault basedon the self-test result.